HCD-MJ1

SERVICE MANUAL

Ver 1.2 2003.12

US Model
Canadian Model
AEP Model
UK Model
E Model

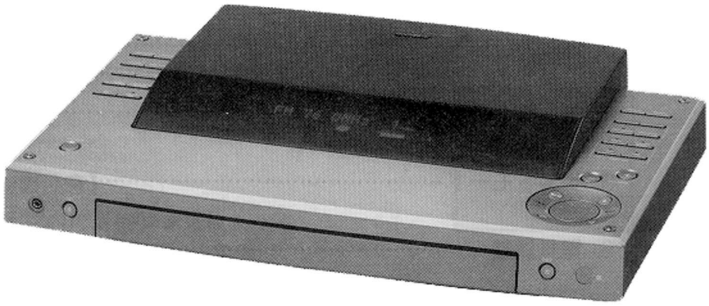

● HCD-MJ1 is the tuner, CD amplifier and MDsection in MJ-L1.

US and foreign patents licensed from Dolby Laboratories Licensing Corporation.

CD Section	Model Name Using Similar Machanism	HCD-D1/T1
	CD Mechanism Type	CDM13C-5BD19
	Base Unit Name	BU-5BD19
MD Section	Model Name Using Similaar Mechanism	NEW
	Mini Disc Mechanism Type	MDM-2ER

SPECIFICATIONS

CD ptayer section

System Compact disc and digital audio system
Laser Semiconductor laser (λ=780 nm)
Emission duration: continuous
Laser output
Max 44.6 μW*
* This output is the value measured at a distance of 200mm from the objective lens surface on the Optical Pick-up Block with 7 mm aperture.
Wavelength
780 - 790 nm
Frequency response
2 Hz - 20 kHz

MiniDisc deck section

System MiniDisc digital audio system
Disc MiniDisc
Laser Semiconductor laser (λ= 780 nm)
Laser output
Max 44.6 μW*
* This output is the value measured at a distance of 200mm from the objective lens surface on the Optical Pick-up Block with 7 mm aperture.
Laser diode properties
Materi.II: GaAIAs
Revolutions (CLV)
Approx. 400 rpm to 900 rpm
Error correction
Adv,Inced Cross IntL•rleave Rced Solomon Code (ACIRC)
Sampling frequency
44.1 kHZ
Modulation system
EFM
(Eight-to-Fourteen Modula tion)
Number of channels
2 stereo channels
Frequency response
5 Hz - 20 kHz
Wow and fluttei
Below measurable limit

Tuner section

FM tuner section

Tuning range
US, Canadian model
: 87.5 - 108.0 MHz (100 kHz step)
Except US, Canadian model
: 87.5 - 108.0 MHz (50 kHz step)
Aerial FM Iead aerial
Aerial terminal
75 ohm unbalanced
Intermediate frequency
l0.7 MHz

AM tuner section

Tuning range
US, Canadian model
: 530 - 1.710 kHz
(with the interval set at 10 kHz)
AEP, UK, German, Italian, Singapore, Hong kong model
: 531 - 1.602 kHz
(with the interval set at 9 kHz)
Aerial AM Ioop aerial,
External aerial terminals
Intermediate frequency
450 kHz

Timer section

System Quartz lock system
Timer setting
One-minute step
Sleep timer
10-minute step. max. 90 minutes

– Continued on pag 2 –

FLAT COMPONENT SYSTEM

9-960-606-13
2003L02-1
© 2003.12

Sony Corporation
Home Audio Company
Published by Sony Engineering Corporation

SONY®

Amplifier section

DIN power output
30 W + 30 W
(6 ohms at 1 kHz, DIN)
Continuous RMS power output
US, Canadian model :
30 W + 30 W
(6 ohms at 40Hz-16kHz, 1.0% THD)
35 W + 35 W
(6 ohms at 1kHz, 5% THD)
POPO 350W
Except US, Canadian model :
40 W + 40 W
(6 ohms at 1 kHz, lO% THD)
Music power output
70W+70W
(6 ohms at 1 kHz. lO% THD)
Inputs TAPE (phono jacks):
voltage 250 mV
impedance 47 kilohms
Outputs TAPE (phono jacks):
voltage 250 mV
impedance 1 kilohms
PHONES (stereo phone jack):
accepts headphones of 8 ohms or more.

Supplied accessories

Sony RM-SMJI Remote (1)
Sony lithium battery. CR2025 (1)
FM lead aerial (1)
AM loop aerial (1)
Speaker cords (2)

General

Power requirements

Destination	Power requirements	Power consumption
US, Canadian model	120V AC,60Hz	95W
AEP, UK, German Italian model	220-230V AC, 50/60Hz	95W
E, Singapore, Hong Kong model	110-120V/ 220-240V AC, 50/60Hz Adjustable with the Voltage Selector	95W

Dimensions

Approx. 430 x 95 x 290 mm
(17 x 3 3/4 x 11 1/2 inches) (w/h/d)
incl. projecting parts and controls
Mass Approx. 7.0 kg (15 Ib 7 oz)

Design and specifications are subject to change without notice.

TABLE OF CONTENTS

Specifications 1

1. SERVICING NOTES 4

2. GENERAL
Index to parts and Controls 5

3. DISASSEMBLY
3-1. Case (Top) Section and Plate (T back) Ornamentel Removal 8
3-2. Main board,Tuner board and Display board Removal 8
3-3. CD Mechanism, MD Mechanism and Digital board Removal 9

4. DISC TABLE GETTING OUT PROCEDURE ON THE POWER SUPPLY IS OFF 10

5. TEST MODE 11

6. ELECTRICAL ADJUSTMENTS 14

7. EXPLANATION OF IC TERMINALS 22

8. DIAGRAMS
8-1. Block Diagram –Main Section– 30
8-2. Block Diagram –MD Section– 33
8-3. Circuit Boards Location 37
8-4. Printed Wiring Boards –Main Section– 38
8-5. Schematic Diagram –Main Section– 41
8-6. Schematic Diagram –Digital Section– 46
8-7. Printed Wiring Boards –Digital Section– 51
8-8. Printed Wiring Boards –BD : MD Section– 54
8-9. Schematic Diagram –BD : MD Section– 57
8-10. Schematic Diagram –Display Section– 61
8-11. Printed Wiring Boards –Display Section– 65
8-12. Schematic Diagram –BD : CD Section– 70
8-13. Printed Wiring Boards –BD : CD Section– 73
8-14. IC Block Diagram 75

9. EXPLODED VIEWS
9-1. Cabinet Section 79
9-2. Chassis Section-1 80
9-3. Chassis Section-2 81
9-4. MD Mechanism Section (MDM-2ER) 82
9-5. Base Unit Section (MD) (MBU-2) 83
9-6. CD Mechanism Section-1 (CMD-5BD19) 84
9-7. CD Mechanism Section-1 (CMD-5BD19) 85

10. ELECTRICAL PARTS LIST 86

MODEL IDENTIFICATION

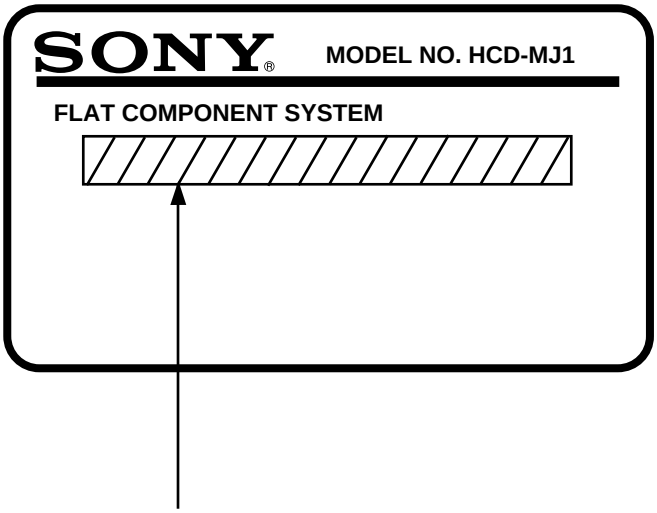

US, Canadian model : AC120V ∼60Hz
AEP, UK, German, Italian model
: AC220-230V ∼50/60Hz
Hong kong, Sinagpore mdel
: AC110-120V/AC220-240V ∼50/60Hz

Laser component in this product is capable of emitting radiation exceeding the limit for Class 1.

For customers in Europe

This Compact Disc player is classified as a CLASS 1 LASER product.
The CLASSLASER PRODUCT label is located on the rear exterior.

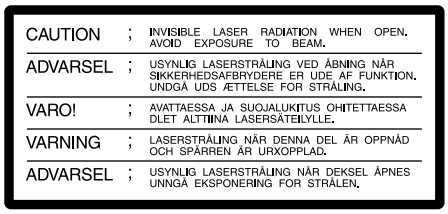

CAUTION	;	INVISIBLE LASER RADIATION WHEN OPEN. AVOID EXPOSURE TO BEAM.
ADVARSEL	;	USYNLIG LASERSTRÅLING VED ÅBNING NÅR SIKKERHEDSAFBRYDERE ER UDE AF FUNKTION. UNDGÅ UDS ÆTTELSE FOR STRÅLING.
VARO!	;	AVATTAESSA JA SUOJALUKITUS OHITETTAESSA DLET ALTTIINA LASERSÄTEILYLLE.
VARNING	;	LASERSTRÅLING NÄR DENNA DEL ÄR OPPNÅD OCH SPÄRREN ÄR URXOPPLAD.
ADVARSEL	;	USYNLIG LASERSTRÅLING NÅR DEKSEL ÅPNES UNNGÅ EKSPONERING FOR STRÅLEN.

This caution label is located insuide the unit.

CAUTION
Use of controls or adjustments or performance of procedures other than those specified herein may result in hazardous radiation exposure.

SAFETY CHECK-OUT

After correcting the original service problem, perform the following safety check before releasing the set to the customer :
Check the antenna terminals, metal trim, “metallized” knobs, screws, and all other exposed metal parts for AC leakage. Check leakage as described below.

LEAKAGE TEST

The AC leakage from any exposed metal part to earth ground and from all exposed metal parts to any exposed metal part having a return to chassis, must not exceed 0.5mA (500 microampers).
Leakage current can be measured by any one of three methods.

1. A commercial leakage tester, such as the Simpson 229 or RCA WT-540A. Follow the manufacturers’ instructions to use these instruments.
2. A battery-operated AC milliammeter. The Data Precision 245 digital multimeter is suitable for this job.
3. Measuring the voltage drop across a resistor by means of a VOM
   or battery-operated AC voltmeter. The “limit” indication is 0.75V, so analog meters must have an accurate low-voltage scale. The Simpson 250 and Sanwa SH-63Trd are examples of a passive VOM that is suitable. Nearly all battery operated digital multimeters that have a 2V AC range are suitable. (See Fig. A)

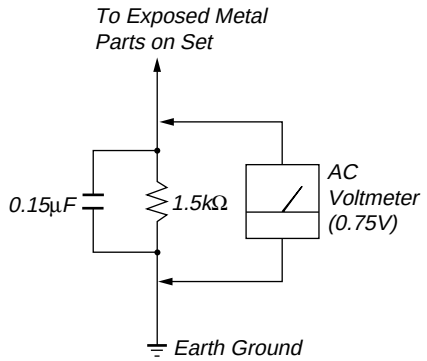

Fig. A. Using an AC voltmeter to check AC leakage.

SAFETY-RELATED COMPONENT WARNING!!

**COMPONENTS IDENTIFIED BY MARK ⚠ OR DOTTED LINE WITH MARK ⚠ON THE SCHEMATIC DIAGRAMS AND IN THE PARTS LIST ARE CRITICAL TO SAFE OPERATION.
REPLACE THESE COMPONENTS WITH SONY PARTS WHOSE PART NUMBERS APPEAR AS SHOWN IN THIS MANUAL OR IN SUPPLEMENTS PUBLISHED BY SONY.**

ATTENTION AU COMPOSANT AYANT RAPPORT À LA SÉCURITÉ!

LES COMPOSANTS IDENTIFIÉS PAR UNE MARQUE ⚠ SUR LES DIAGRAMMES SCHÉMATIQUES ET LA LISTE DES PIÈCES SONT CRITIQUES POUR LA SÉCURITÉ DE FONCTIONNEMENT. NE REMPLACER CES COMPOSANTS QUE PAR DES PIÈCES SONY DONT LES NUMÉROS SONT DONNÉS DANS CE MANUEL OU DANS LES SUPPLÉMENTS PUBLIÉS PAR SONY.

SECTION 1
SERVICING NOTES

NOTES ON HANDLING THE OPTICAL PICK-UP BLOCK OR BASE UNIT

The laser diode in the optical pick-up block may suffer electrostatic breakdown because of the potential difference generated by the charged electrostatic load, etc. on clothing and the human body.
During repair, pay attention to electrostatic breakdown and also use the procedure in the printed matter which is included in the repair parts.
The flexible board is easily damaged and should be handled with care.

NOTES ON LASER DIODE EMISSION CHECK

The laser beam on this model is concentrated so as to be focused on the disc reflective surface by the objective lens in the optical pick-up block. Therefore, when checking the laser diode emission, observe more than 30 cm away from the objective lens.

ENTERING TEST MODE

When you press the DISP button, ■ button, and EDIT button at the same tilne, the system goes into key, fluorescent tube, jogr and LED check mode.

- Fluorescent tube check
  All the lights light up. Then, each time you press the ENTER button, the display mode changes as shown below.
  → All lit → partially lit l → partially lit 2 →
- LED check
  When you turn the jog dial, the LEDS change froln all lit to individually lit.
- Key check
  The EDIT/NO button puts the system into key/jog check mode .
  When you press a button, the number is counted up.
  However, pressing a button again that you already pressed does not count up the number.
  Turning the jog dial to the right increases the jog count display, turning the jog dial to the left decreases the jog count.
  When you have pressed all the buttons and "KEY= 0K" is displayed, pressing any button ends test Inode.

Cautions when replacing IC121 and IC171 on the BD board

A change has been made from CXD2535BR due to a modification of IC121 on the BD board in this unit.
Accompanying this modification, a portion of the nonü]volatile memory of IC171 (XC24CO1S) has been changed.
Conversely, when IC121 has been replaced, use CXD2535BR and rewrite the contents of IC171.

Contents of non-volatile memories CXD2535BR

Address	CXD2535BR
15	93
2D	1A
2E	1A

Rewrite Procedure for Non-volatile Memory

(1) With the power switched off and the power plug plugged into a socket. press the BASS/TREBLE button. CLOCK button, and MD button more than one at a time in order.
(2) Rotate the JOG dial knob and display the "EEP MODE".
When you press the YES key, the display changes to show "EEP**@@".
(Here, **indicates the address, and @@ indicates the data.)
(3) Rotate the JOG dial knob and display the "EEP 15 @@".
(4) When you press the CD SYNCHRO button, "EEP 15 @@>@@" is displayed so then turn the JOG dial knob to show ügEEP 15 @@>93"
(5) Press the YES key and "COMPLETE" will appear for a moment and data shown as "EEP 15 93" is being rewritten.
(6) Rewrite address 2D and address 2E, into 1A using steps (3) to (5) above.
(7) When all changes are complete, press the NO key and display "EEP MODE".
(8) Press the REPEAT button. If no disc is loaded, the time is displayed, so unplug the power plug. If a disc is loaded, the disc is ejected, then the time is displayed. Unplug the power plug from the socket to end EEP rewrite mode. (See "How to end test mode" below.)

Note: Changes in the contents of non-volatile memory are not reflected until the power is switched off, then on.

HOW TO END TEST MODE

Method :

l Press the REPEAT button.
2 If no disc is loaded, the time is displayed. If a disc is loaded, the disc is ejected, then the time is displayed .
3 Unplug the power plug from the socket.

This section is extracted from instruction manual.

Index to Parts and Controls

Refer to the pages indicated in parentheses for how to use the controls.
Controls with an asterisk have built-in lamps on themselves.

Front Panel

CD player section

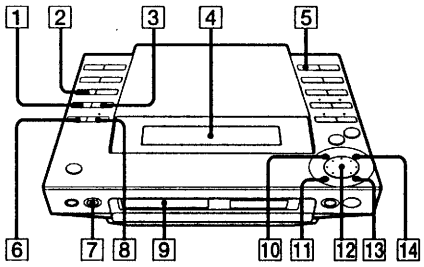

1 PLAY MODE button (9)
2 CHARACTER button (10)
3 REPEAT button (8)
4 Display window (7, 8)
5 DISPLAY button (8)
6 EDIT/NO button (10)
7 CD ≜ (eject) button (7)
8 ENTER/YES button (9, 10)
9 Disc tray (7)
10 ▷II (play/pause) button (7)
11 ◀◀ (fast backward) button (8)
12 JOG dial (7)
13 ▶▶ (fast forward) button (8)
14 □ (stop) button (7)

MiniDisc deck section

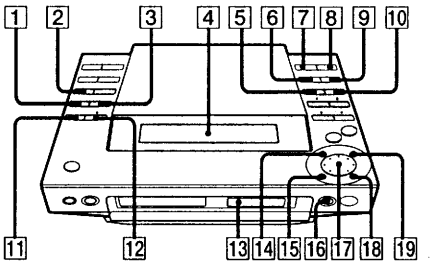

1 PLAY MODE button (13)
2 CHARACTER button (21)
3 REPEAT button (12)
4 Display window (11, 12)
5 REC PAUSE button (15)
6 CD SYNCHRO button (15)
7 DISPLAY button (12)
8 SCROLL button (12, 21)
9 REC button (16)
10 REC STOP button (15)
11 EDIT/NO button (15, 18)
12 ENTER/YES button (13, 15, 18)
13 Disc slot (11)
14 ▷II (play/pause) button (11)
15 ◀◀ (fast backward) button (12)
16 MD ≜ (eject) button (11)
17 JOG dial (11)
18 ▶▶ (fast forward) button (12)
19 □ (stop) button (11)

Tuner section

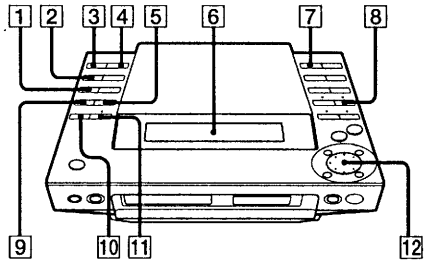

1 CHARACTER button (23)
2 CLOCK button (6)
3 TIMER SELECT button (27)
4 TIMER SET button (26)
5 STEREO/MONO button (22)
6 Display window (22)
7 DISPLAY button (24)
8 TUNER/BAND button (22)
9 TUNING button (22)
10 EDIT/NO button (23)
11 ENTER/YES button (23)
12 JOG dial (22)

Amplifier section

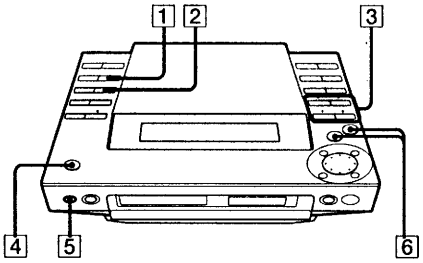

1 BASS/TREBLE button (25)
2 BALANCE button (25)
3 FUNCTION buttons
TAPE button (16, 28)
MD button (11, 18)
CD button (7, 16)
TUNER/BAND button (16, 22)
4 POWER switch (7, 27)
5 PHONES jack (25)
6 VOLUME +/– buttons (25)

Rear Panel

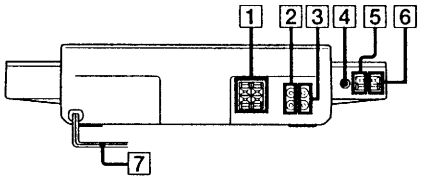

1 SPEAKER connectors (4)
2 TAPE OUT jacks (28)
3 TAPE IN jacks (28)
4 FM 75 Ω COAXIAL connector (4)
5 ⏚ (earth) terminal (4)
6 AM terminal (4)
7 Mains lead (5)

Display Window

CD player section

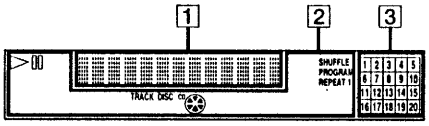

1 Playing time/track number indication (7)
2 CD indication
▷II (play/pause) (7)
REPEAT 1 (8)
SHUFFLE (9)
PROGRAM (9)
DISC (7)
TRACK (7)
3 Music calendar (7)

MD deck section

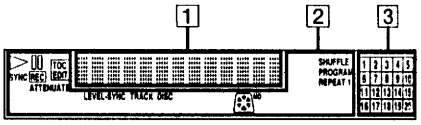

1 Playing time/track number/title indication (11)
2 MD indication
▷II (play/pause) (11)
REC (15)
SYNC (synchro) (15)
LEVEL-SYNC (level synchro) (14)
TOC EDIT (TOC edit) (15)
REPEAT 1 (12)
SHUFFLE (13)
PROGRAM (13)
DISC (11)
TRACK (11)
3 Music calendar (11)

Tuner section

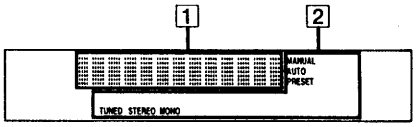

1 Frequency/time/station name indications (6, 22, 23, 26)
2 Tuner indications
TUNED (22)
STEREO MONO (22)
MANUAL (22)
AUTO (22)
PRESET (24)

Remote (RM-SMJ1)

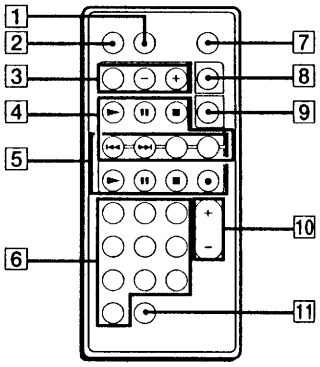

1 SLEEP button (26)
2 FUNCTION button (16)
3 Tuner operating buttons
  BAND button (22)
  PRESET + / – buttons (24)
4 CD operating buttons
  ► (play) button (7)
  II (pause) button (7)
  ■ (stop) button (7)
  ⏮ (search backward) button (7)
  ⏭ (search forward) button (7)
  REPEAT button (8)
  P.MODE (play mode) button (9)
5 MD operating buttons
  ► (play) button (11)
  II (pause) button (11)
  ■ (stop) button (11)
  ⏮ (search backward) button (11)
  ⏭ (search forward) button (11)
  ● REC button (16)
  REPEAT button (12)
  P.MODE (play mode) button (13)
6 Numeric buttons (7, 11, 24)
7 POWER button (7)
8 DISPLAY button (8, 12)
9 SCROLL button (12, 21)
10 VOL +/– buttons (25)
11 >10 button (7, 11, 24)

SECTION 3
DISASSEMBLY

Note : Follow the disassembly procedure in the numerical order given.

3-1. CASE (TOP) SECTION AND PLATE (T BACK) ORNAMENTEL REMOVAL

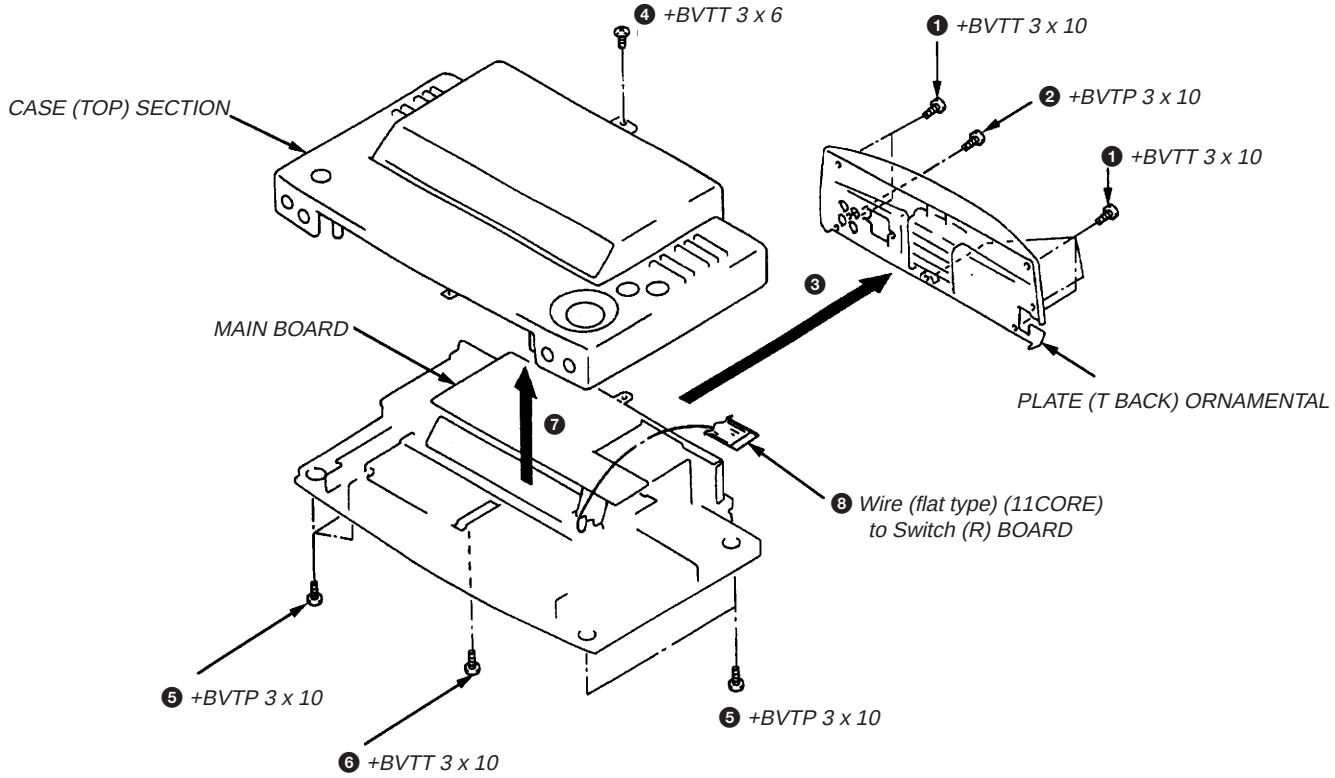

3-2. MAIN BOARD,TUNER BOARD AND DISPLAY BOARD REMOVAL

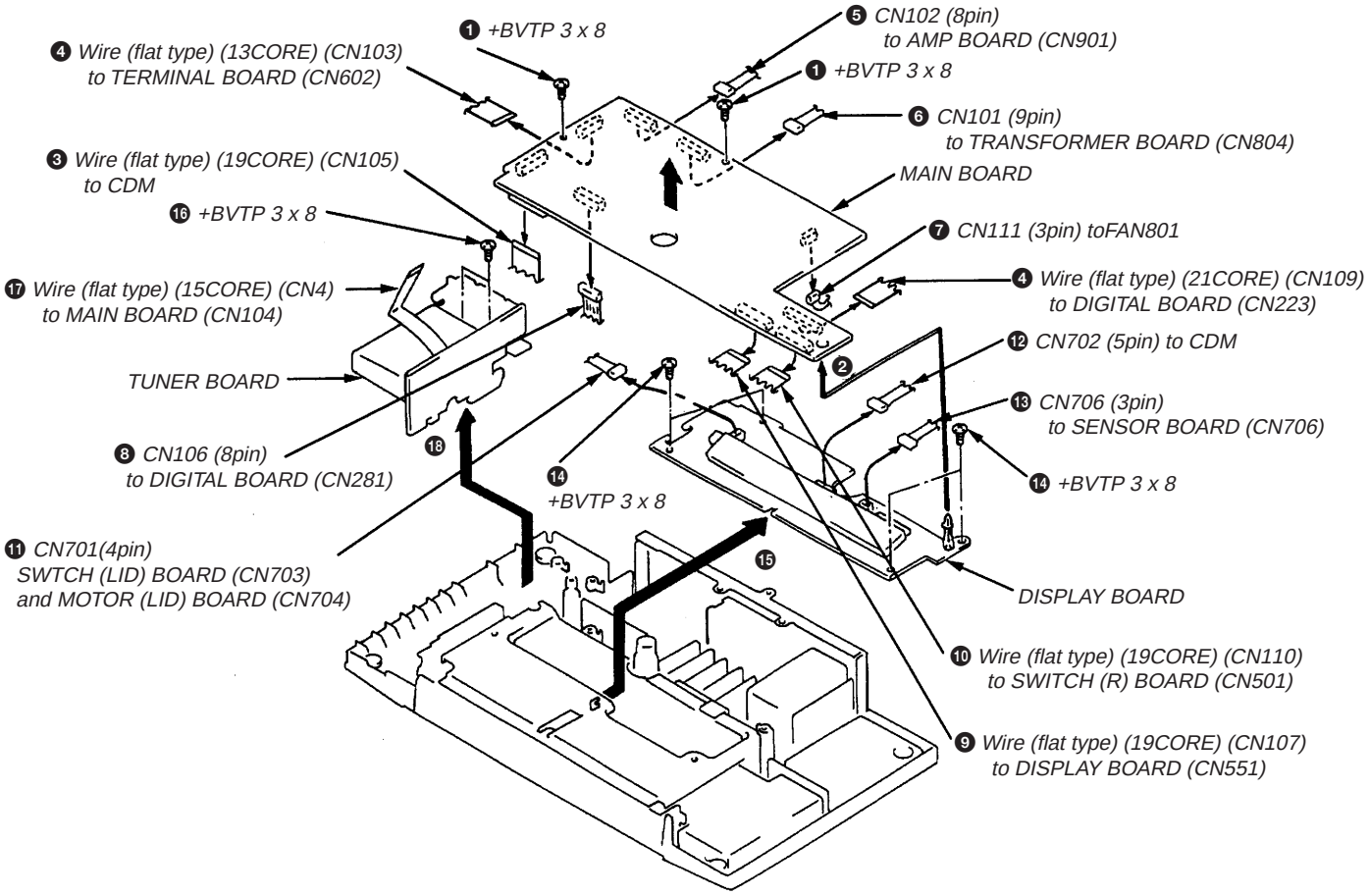

3-3. CD MECHANISM, MD MECHANISM AND DIGITAL BOARD REMOVAL

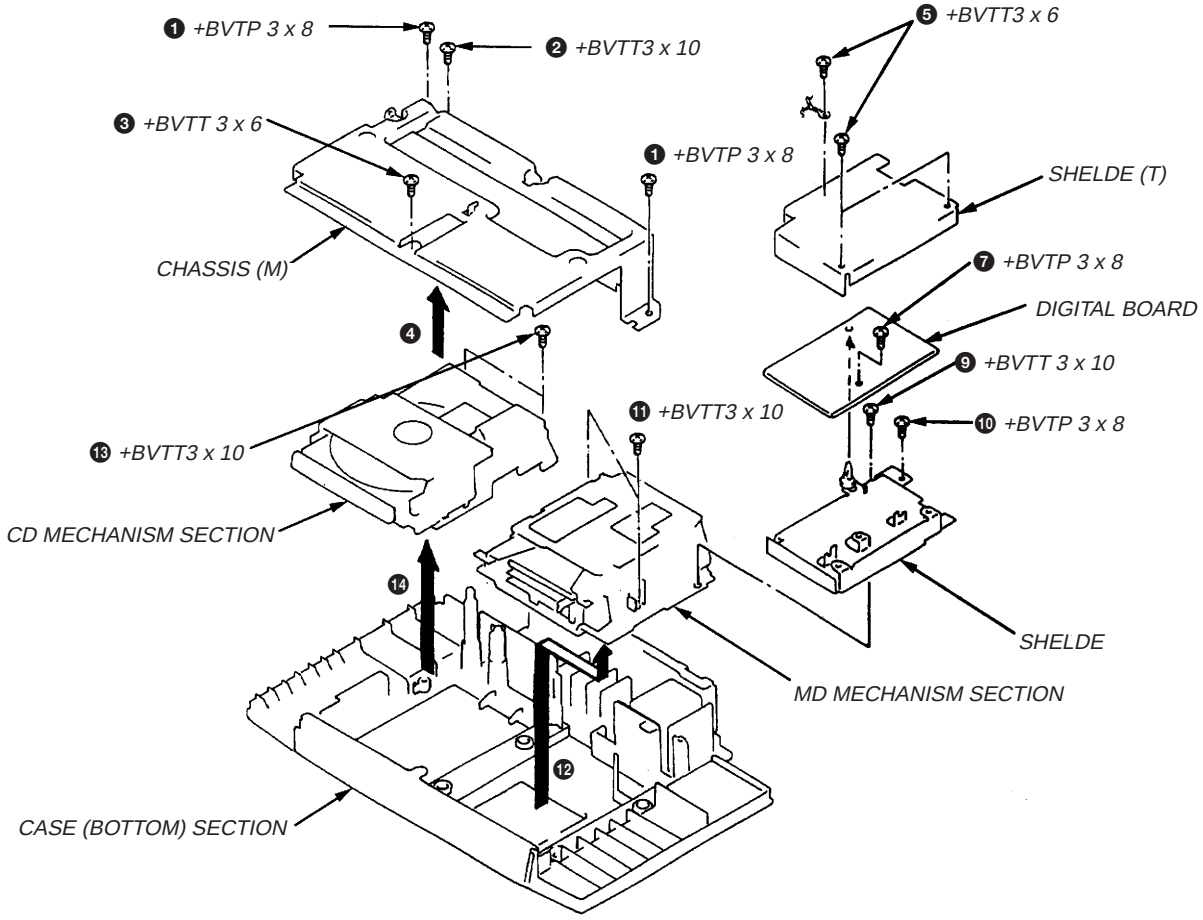

SECTION 4
DISC TABLE GETTING OUT PROCEDURE ON THE POWER SUPPLY IS OFF

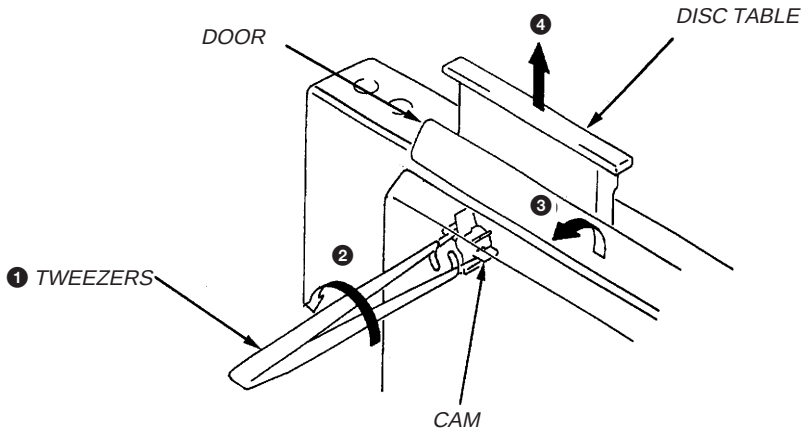

SECTION 5
TEST MODE

5-1. How to enter the Test Mode

With the power switched off and the power plug plugged into a socket, press the BASS/TREBLE button, CLOCK button, and MD button more than one at a time in order.

5-2. How to Release the Test Mode

Press the REPEAT button.

5-3. Basic Operations of the Test Mode

All operations are performed using the JOG dial (Rotary Encoder) , YES (ENTR/TES)button, and NO (EDIT/ON)button.
The functions of these keys are as follows.

Function	Contents
JOG dial	Changes parameters and modes.
YES button	Proceeds onto the next setp. inalizes input
NO button	Returns to previous step. Stops operations.

5-4. Selecting the Test Mode

Eight test modes are selected by turning the AMS knob.

Display	Contents
TEMP ADJUST	Temperature compnsation offset adjustment
LDPWR ADJUST	Laser power adjustment
EFBAL ADJUST	Traverse adjustment
FBIAS ADJUST	Focus bias adjustment
FBIAS CHECK	Focus bias check
CPLAY MODE	Continuous playback mode
CREC MODE	Continuous recording mode
EEP MODE	Non-volatile memory mode*

For detailed description of each adjustment mode, refer to 6. Electrical Adjustments.
If a different adjustment mode has been selected by mistake, press the NO button to exit from it.
* The EEP MODE is not used in servicing. If set accidentally, press the NO button immediately to exit it.

5-5-1. Operating the Continuous Playback Mode

1. Entering the continuous playback mode
   ① Set the disc in the unit (either MO or CD).
   ② Rotate the JOG dial and display “CPLAY MODE”.
   ③ Press the YES button to change the display “CPLAY IN”.
   ④ When access completes, the display changes to “C1 = ⠿⠿⠿⠿ AD = ⠿⠿”

Note : The “ ⠿ ” displayed are arbitrary numbers.

2. Changing the parts to be played back
   ① Press the YES button during continuous playback to change the display to “CPLAY MID”, “CPLAY OUT”.
   When pressed another time, the parts to be playedback can be changed.
   ② When access completes, the display changes to “C1 = ⠿⠿⠿⠿ AD = ⠿⠿”

Note : The “ ⠿ ” displayed are arbitrary numbers.

3. Ending the continuous playback mode
   ① Press the No button. The display will change to “CPLAY MODE”.
   ② Press the MD ≜ button and remove the disc.

Note 1 : The playback start addresses for IN, MID, and OUT are as follows.
Press the DISPIAY button twice to display thae address. Pressing the DISPIAY buttan again returns the display to “C1 = ⠿⠿⠿⠿ AD = ⠿⠿”

IN	40h cluster
MID	300h cluster
OUT	700h cluster

5-5-2. Operating the Continuous Recording Mode

1. Entering the continuous recording mode
   ① Set the MO disc in the unit.
   ② Rotate the JOG dial knob and display “CREC MODE”.
   ③ Press the YES button to change the display to “CREC IN”.
   ④ When access completes, the display changes to “CREC (⁞⁞⁞⁞) and REC lights up.

Note : The “ ⁞ ” displayed are arbitrary numbers.

2. Changing the parts to be recorded
   ① When the YES button is pressed during continuous recording. the display changes to “CREC MID”, “CREC OUT”and REC goes off. When pressed another time, the parts to be recorded can be changed.
   ② When access completes, the display changes to “CREC (⁞⁞⁞⁞) and REC lights up.

Note : The “ ⁞ ” displayed are arbitrary numbers.

3. Ending the continuous recording mode
   ① Press the No bottan. The display change to CREC MODE” and REC goes off.
   ② Press the MD ⏏ button and remove the disc.

Note 1 : The recording start addresses for IN, MID, and OUT are as follows.

IN	40h cluster
MID	300h cluster
OUT	700h cluster

Note 2 : The No buttton can be used to stop recording anytime.

Note 3 : During the test mode, the erasing-protection tab will not be detected. Therefore be careful not to set the continuous recording mode when a disc not be erased is set in the unit.

Note 4 : Do not perform continuous recording for long periods of time above 5minutes.

Note 5 : During continuous recording, be careful not to apply vibration.

5-5-3. Non-Volatile Memory Mode (EEP MODE)

This mode reads and writes the contents of the nonü]volatile memory.
It is not used in servicing. If set accidentally, press the No button immediately to exit it.

5-6. Functions of Other buttons

Function	Contents
▶II	Sets continuous playback when pressed in the STOP state. When pressed during continuouse playback,the tracking servo turns ON/OFF.
■	Stops continuouse playback and continuouse recording.
▶▶	The sled moves to the outer circumference only when this is pressed.
◀◀	The sled moves to the inner circumference only when this is pressed.
●	Turns recording ON/OFF when presed during continuoos playback.
SCROOLL	Switches butween the pit and groove modes when pressed.
DISPLAY	Switches the display whin pressed. Returns to previous step. Stops operations.

Note : The erasing-protection tab is not detected during the test mode. Recording will start regardless of the position of the erasing-protection tab when the ● (REC) button is pressed.

5-7. Test Mode Displays

Each time the DISPLAY button is pressed, the display changes in the following order.
MODE display→Error rate display→Address display

1. MODE display
   Displays “TEMP ADJUST” , “CPLAY MODE” , etc.
2. Address display
   Addresses are displayed as follows.
   h = ⠿ ⠿ ⠿ ⠿ s = ⠿ ⠿ ⠿ ⠿ (MO pit and CD)
   h = ⠿ ⠿ ⠿ ⠿ a = ⠿ ⠿ ⠿ ⠿ (MO groove)
   h = Header address
   s = SUBQ address
   a = ADIP address
   * A ‘ __ ’ display appears when the address cannot be loaded.

3. Error rate display
   Error rates are displayed as follows.
   C1 = ⠿ ⠿ ⠿ ⠿ AD = ⠿ ⠿ ⠿ ⠿
   C1 = Indicates C1 error
   AD = Indicates ADER

5-8. Meanings of Other Displays

Display	Contents		
	Light	Off	Blinkig
►	During continuous playbak	STOP	
►II	Tracking servo OFF	Tracking servo ON	
REC	Recording mode ON	Recording mode OFF	
SYNC	CLV LOCK	CLV UNLOCK	
TRACK	Pit	Groove	
DISC	High refiection	Low refiection	
LEVEL-SYNC	CLV-S	CLV-A	
MEMORY	ABCD adjustment completed		
SHUFFLE	(Focus auto gain successful / Tracking auto gain successful)		(Focus auto gain successful / Tracking auto gain failed)

5-9. Precautions for Use of Test Mode

② As loading related operations will be performed regardless of the test mode operations being performed, be sure to check that the disc is stopped before setting and removing it.
Even if the MD ≙ button is pressed while the disc is rotating during continuous playback, continuous recording, etc., the disc will not stop rotating.
Therefore, it will be ejected while rotating.
* Always press the NO button before pressing the MD ≙ button.

② The erasing-protection tab is not detected in the test mode. Therefore, when modes which output the recording laser power such as continuous recording mode and traverse adjustment mode, etc. are set, the recorded contents will be erased regardless of the position of the tab. When using a disc that is not to be erased in the test mode, be careful not enter the continuous recording mode and traverse adjustment mode.

SECTION 6
ELECTRICAL ADJUSTMENTS

PRECAUTION

6-1. Precautions for Checking Laser Diode Emission

To check the emission of the leaser diode during adjustments, never view directly from the top as this may lose your eye-sight.

6-2. Precautions for Use of optical pickup (KMS-210A)

As the laser diode in the optical pickup is easily damaged by static electricity, solder the laser tap of the flexible board when using it. Before disconnecting the connector, desolder first. Before connecting the connector,be careful not to remove the solder. Also tale adequate measures to prevent damage by static electricity. Handle the flexible board with care as it breaks easily.

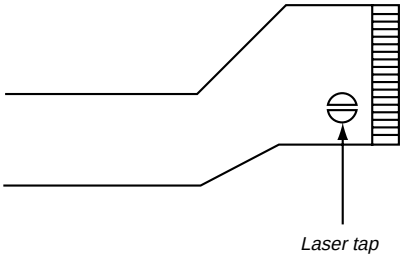

Optical pickup flexible board

6-3. Precautions for Adjustments

1) when replacing the following parts, perform the adjustments and checks with O in the order shown in the following table.

	Optical pickup	BD (MD) BOARD		
		IC171	D101	IC101,IC121,IC191
1. Temperature compensation offset adjustment	X	O	O	O
2. Laser power adjustment	O	X	X	O
3. Traverse adjustment	O	O	X	O
4. Focus bias adjustment	O	O	X	O
5. Error rate check	O	O	X	O

2) Set the test mode when performing adjustments.
   After completing the adjustments,exit the test mode.
3) Perform the adjustments in the order shown.
4) Use the following tools and measuring devices.
   - Test disc (CD) TDYS-1 (Parts No. 4-963-646-01)
   - Laser power meter LPM-8001 (Parts No. J-2501-046-A)
   - Oscilloscope
   - Digital voltmeter
   - Thermometer
5) When observing several signals on the oscilloscope, etc., make sure that VC and GND do not connect inside the oscilloscope. (VC and GND will become short-circuited)
6) Do not move RV105 of the BD (MD) board. When replacing it, adjust to the mechanical center of the semi-fixed resistor.

6-4. Creating MO Continuously Recorded Disc

* This disc is used in focus bias adjustment and error rate check. The following describes how to create a MO continuous recording disc.

1. Insert a MO disc (blank disc) commercially available.
2. Rotate the JOG dial and display “ CREC MODE”.
3. Press the YES button and display “ CREC IN”.
4. Press the YES button again to display “ CREC MID”.
   “ CREC (0300)” is displayed for a moment and recording starts.
5. Complete recording within 5 minutes.
6. Press the NO button and stop recording
7. Press the MD ≜ button and remove the MO disc.

The above has been how to create a continuous recording data for the focus bias adjustment and error rate check.

Note :

- Be careful not to apply vibration during continuous recording.

6-5. Temperature Compensation Offset Adjustment

Save the temperature data at that time in the non-volatile memory as 25°C reference data.

Note :

1. Usually, do not perform this adjustment.
2. Perform this adjustment in an ambient temperature of 22°C to 28°C. Perform it immediately after the power is turned on when the internal temperature of the unit is the same as the ambient temperature
3. When D101 has been replaced, perform this adjustment after the temperature of this part has become the ambient temperature.

Adjusting Method :

1. Rotate the JOG dial and display “TEMP ADJUST”.
2. Press the YES button and select the “TEMP ADJUST” mode.
3. “TEMP = ⁝⁝ ⁝⁝ ”and the current temperature data will be displayed
4. To save the data, press the YES button.
   When not saving the data, press the NO button.
5. When the YES button is pressed, “TEMP = ⁝⁝ ⁝⁝ SAVE”will be displayed for some time, followed by “TEMP ADJUST”.
   When the NO button is pressed, “TEMP ADJUST” will be displayed.

Specifications :

The temperature should be within “TEMP = EO” to “TEMP = IF”.

4-6. Laser Power Adjustment

Connection :

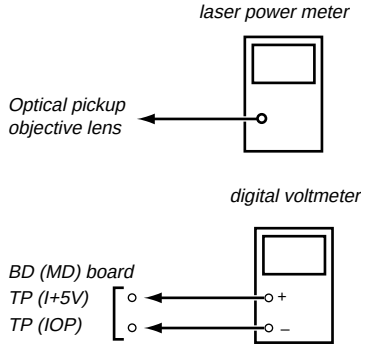

Adjusting Method :

1. Set the laser power meter on the objective lens of the optical pickup. (When it cannot be set properly, press the ◀◀ button or ▶▶ button and move the optical pickup.)
   Connect the digital volt meter to TP (IOP) and TP (I+5V).
2. Rotate the JOG dial and display “LDPWR ADJUST”.
   (Laser power : For adjustment)
3. Press the YES button twice and display “LD $ 4B = 3.5mW”.
4. Adjust RV102 of the BD (MD) board so that the reading of the laser power meter becomes $3.4^{+0.1}_{-0}$ mW.
5. Press the YES button and display “LD $ 96 = 7.0mW”.
   (Laser power : MO writing)
6. Check that the laser power meter and digital voltmeter readings satisfy the specified value.

Specification :

Laser power meter reading	: 7.0 ± 0.3 mW
Digital voltmeter reading	: Optical pickup displayed value ± 10%

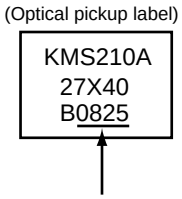

IOP = 82.5mA in this case

IOP (mA) = Digital voltmeter reading (mV) / 1(Ω)

7. Press the YES button and display “LD $ 0F = 0.7mW”.
   (Laser power : MO reading)
8. Check that the laser power meter at this time satisfies the specified value.

Specification :

Laser power meter reading : 0.70 ± 0.1mW

9. Press the NO button and display “LDPWR ADJUST”, and stop laser emission.
   (The NO button is effective at all times to stop the laser emission.)

6-7. Traverse Adjustment

Connection :

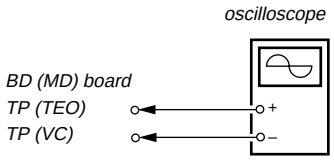

Adjusting Method :

1. Connect an oscilloscope to TP (TEO) and TP (VC) of the BD (MD) board.
2. Load a MO disc (any available on the market).
3. Press the ◀◀ button or ▶▶ button and move the optical pickup outside the pit.
4. Rotate the JOG dial and display "EFBAL ADJUST".
5. Press the YES button and display "EFBAL MO-W".
   (Laser power WRITE power/Focus servo ON/tracking servo OFF/ spindle (S) servo ON)
6. Adjust RV101 of the BD (MD) board so that the waveform of the oscilloscope becomes the specified value.
   (MO groove write power traverse adjustment)

(Traverse Wavefom)

Specification : A = B

7. Press the YES button and display "EFB = $ ⁝ MO-R".
   (Laser power : MO reading)
8. Rotate the JOG dial so that waveforms of the oscilloscope becomes the specified value.
   (When the JOG dial is rotated, the ⁝ of "EFB = ⁝ " changes and the waveform changes.) in this adjustment, waveform varies at intervals of approx. 3%. Adjust the waveform so that the specified value is satisfied as much as possible.
   (MO groove read power traverse adjustment)

(Traverse Wavefom)

Specification : A = B

9. Press the YES button, display "EFB = $ ⁝ SAVE" for a moment and save the adjustment results in the non-volatile memory.
   Next "EFBAL MO-P" is displayed.
10. Press the YES button and display "EFB = $ ⁝ MO-P".
    The optical pickup moves to the pit area automatically and servo is imposed.
11. Rotate the JOG dial until the waveforms of the oscilloscope moves closer to the specified value.
    In this adjustment, waveform varies at intervals of approx. 3%. Adjust the waveform so that the specified value is satisfied as much as possible.

(Traverse Wavefom)

Specification : A = B

12. Press the YES button, display "EFB = ⁝ SAVE " for a moment and save the adjustment results in the non-volatile memory.
    Next "EFBAL CD" is displayed. The disc stops rotating automatically.
13. Press the MD ⏏ button and remove the MO disc.
14. Load the test disc TDYS-1.
15. Press the YES button and display "EFB = ⁝ CD " . Servo is imposed automatically.
16. Rotate the JOG dial so that the waveforms of the oscilloscope moves closer to the specified value.
    In this adjustment, waveform varies at intervals of approx. 3%. Adjust the waveform so that the specified value is satisfied as much as possible.

(Traverse Wavefom)

Specification : A = B

17. Press the YES button, display "EFB = $ ⁝ SAVE" for a moment and save the adjustment results in the non-volatile memory.
    Next "EFBAL ADJUST" is displayed.
18. Press the MD ⏏ button and remove the test disc TDYS-1.

Note 1) Data will be erased during MO reading if a recorded disc is used in this adjustment.

Note 2) If the traverse waveform is not clear, connect the oscilloscope as shown in the following figure so that it can be seen more clearly.

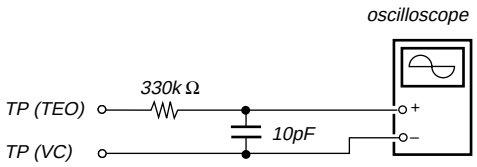

6-8. Focus Bias Adjustment

Adjusting Method :

1. Load a continuously recorded disc (Refer to “6-4. Creating MO Continuously Recorded Disc”.)
2. Rotate the JOG dial and display “CPLAY MODE”.
3. Press the YES button twice and display “CPLAY MID”.
4. Press the NO button when “C1 = AD = ” is displayed.
5. Rotate the JOG dial and display “FBIAS ADJUST”.
6. Press the YES button and display “ / a = ”.
   The first four digits indicate the C1 error rate, the two digits after [/] indicate ADER, and the 2 digits after [a =] indicate the focus bias value.
7. Rotate the JOG dial in the clockwise direction and find the focus bias value at which the C1 error rate becomes 220.
8. Press the YES button and display “ / b = ”.
9. Rotate the JOG dial in the counterclockwise direction and find the focus bias value at which the C1 error rate becomes 220.
10. Press the YES button and display “ / c = ”.
11. Check that the C1 error rate is below 50 and ADER is 00.
    Then press the YES button.
12. If the “( )” in “ - - ( )” is above 20, press the YES button.
    If below 20, press the NO button and repeat the adjustment from step 2 again.
13. Press the NO button and press the MD ≜ button to remove the continuously recorded disc.

Note 1 : The relation between the C1 error and focus bias is as shown in the following figure. Find points a and b in the following figure using the above adjustment. The focal point position c is automatically calculated from points a and b.

Note 2 : As the C1 error rate changes, perform the adjustment using the average vale.

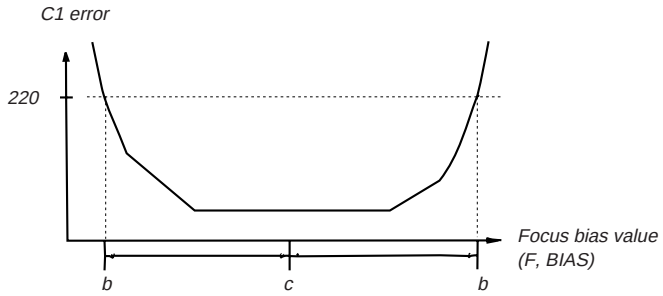

6-9. Error Rate Check

6-9-1. CD Error Rate Check

Checking Method :

1. Load a test disc TDYS-1.
2. Rotate the JOG dial and display “CPLAY MODE”.
3. Press the YES button twice and display “CPLAY MID”.
4. “C1 = AD = - -” is displayed.
5. Check that the C1 error is below 20.
6. Press the NO button, stop playback, press the MD ≜ button, and remove the test disc.

6-9-2. MO Error Rate Check

Checking Method :

1. Load a continuously recorded disc (Refer to “6-4. Creating MO Continuously Recorded Disc”.)
2. Rotate the JOG dial and display “CPLAY MODE”.
3. Press the YES button twice and display “CPLAY MID”.
4. “C1 = AD = ”is displayed
5. If the C1 error rate is below 50, check that ADER is 00.
6. Press the NO button, stop playback, press the MD ≜ button, and remove the continuously recorded disc.

6-10. Focus Bias Check

Change the focus bias and check the focus tolerance amount.

Checking Method :

1. Load a continuously recorded disc (Refer to “6-4. Creating MO Continuously Recorded Disc”.)
2. Rotate the JOG dial and display “CPLAY MODE”.
3. Press the YES button twice and display “CPLAY MID”.
4. Press the NO button when “C1 = AD = ” is displayed
5. Rotate the JOG dial and display “FBIAS CHECK”.
6. Press the YES button and display “ / c = ”.
   The first four digits indicate the C1 error rate, the two digits after [/] indicate ADER, and the 2 digits after [c =] indicate the focus bias value.
   Check that the C1 error is below 50 and ADER is 00.
7. Press the YES button and display “ / b = ”.
   Check that the C1 error is not below 220 and ADER is not above 00 every time.
8. Press the YES button and display “ / a = ”.
   Check that the C1 error is not below 220 and ADER is not above 00 every time.
9. Press the NO button, next press the MD ≜ button, and remove the continuously recorded disc.

Note 1 : If the C1 error and ADER are above 00 at points a or b, the focus bias adjustment may not have been carried out properly. Adjust perform the beginning again.

6-11. Adjusting Points and Connecting Points

[BD (MD) BOARD] (Component side)

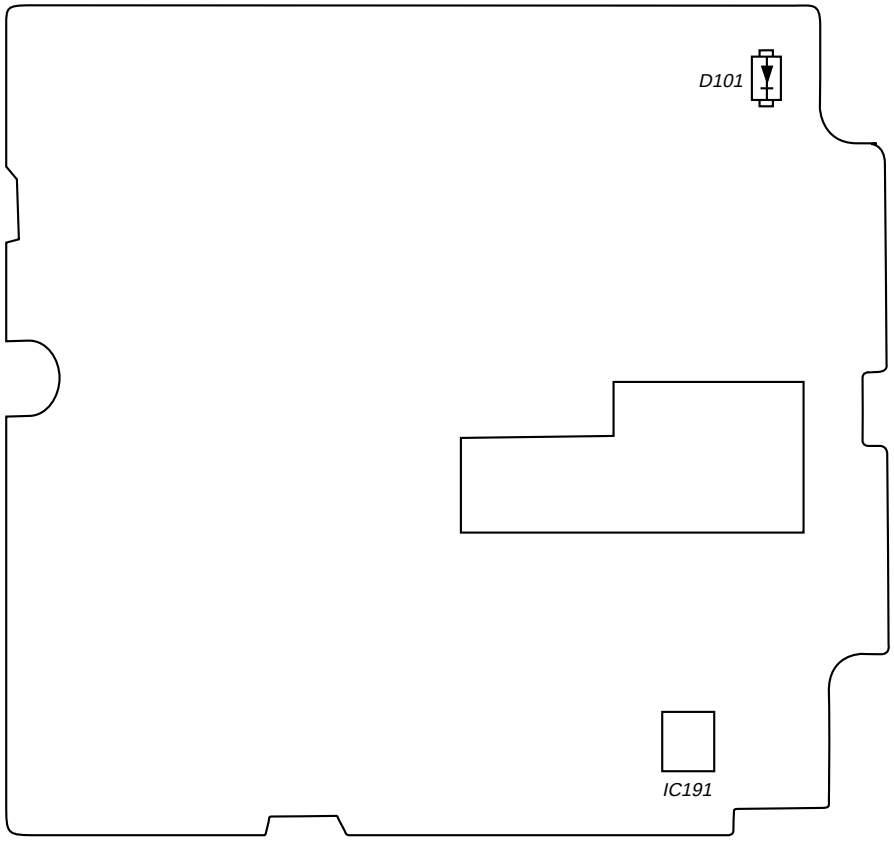

[BD (MD) BOARD] (Conductor side)

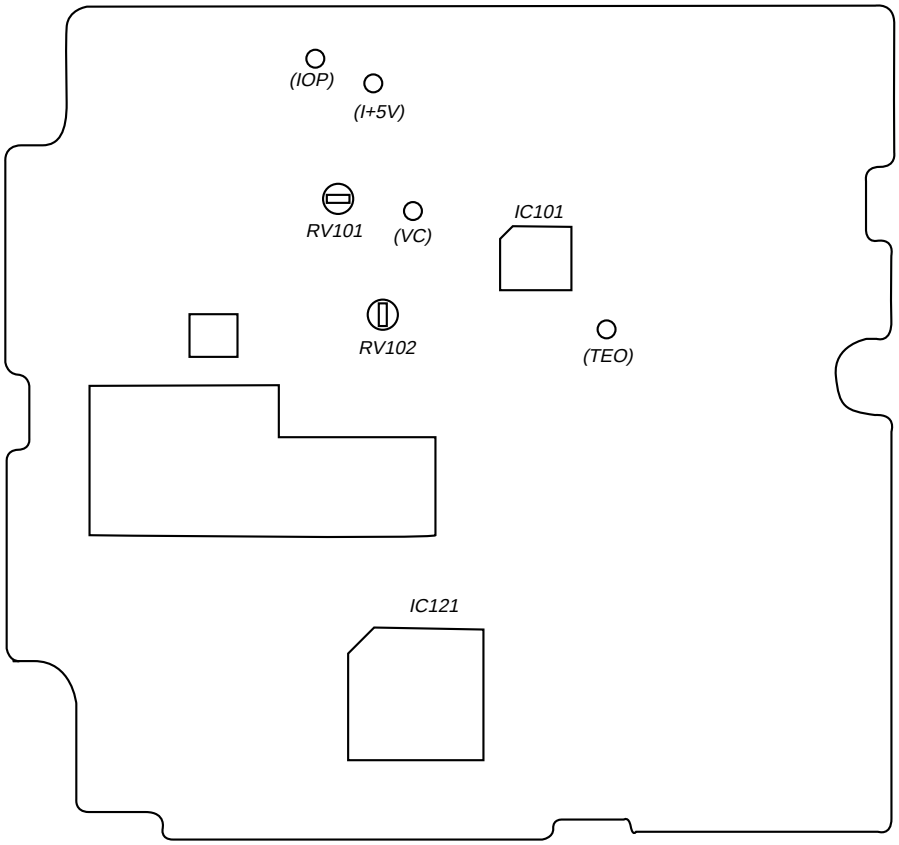

TUNER SECTION

As a front-end (TB1) is difficult to repair if faulty, replace it with new one.
But AEP, UK, German, and Italian model are please note, however, that the following adjustments are possible:

AM Section Adjustment

AM Tuned Indication Lighting Level Adjustment

Band : AM
Setting :

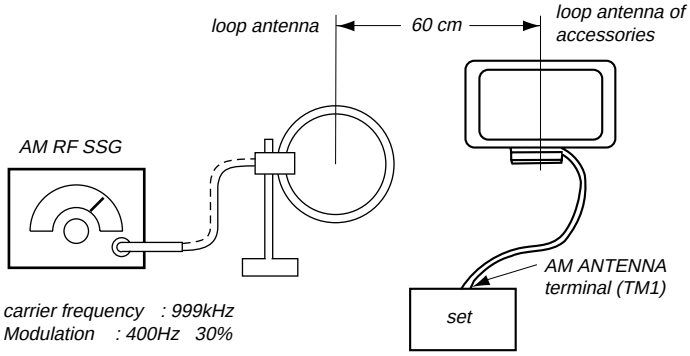

Procedure :

1. Set AM RF SSG output level to 81dBμ so that the input level becomes 55dBμ.
2. Tune the set to 999kHz .
3. Adjust RV(AM TUNED LEVEL ADJUSTMENT) so that the TUNED light up.

Adjustment Location : TB1 (TUNER board)

FM Section Adjustment

FM Tuned Indication Lighting Level Adjustment

Band : FW
Setting :

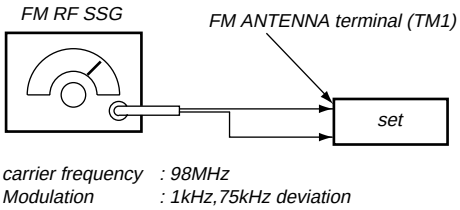

Procedure :

1. Supply a 17.8 μV (25dBμ) 98MHz signal to the ANTENNA terminal.
2. Tune the set to 98MHz.
3. Adjust RV(FM TUNED LEVEL ADJUSTMENT) so that the TUNED light up.

Adjustment Location : TB1 (TUNER board)

FM Stereo Separation Adjustment

Setting :

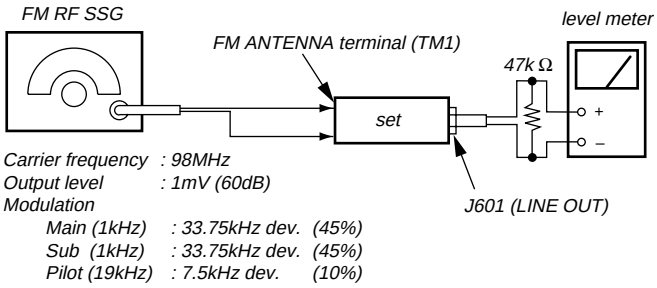

Procedure :

Turn the set to 98MHz.

FM stereo signal generator output channel	VTVM connection	VTVM reading (dB)
L-CH	L-CH	Ⓐ
R-CH	L-CH	Ⓑ Adjust RV (FM STEREO SEPARATION ADJUSTMENT) for minimum reading.
R-CH	R-CH	Ⓒ
L-CH	R-CH	Ⓓ Adjust RV (FM STEREO SEPARATION ADJUSTMENT) for minimum reading.

L-CH Stereo separation : Ⓐ - Ⓑ
R-CH Stereo separation : Ⓒ - Ⓓ

The separations of both channels should be equal.

Adjustment Location : TB1 (TUNER board)

[TB1 TUNER BOARD] (Conductor side)

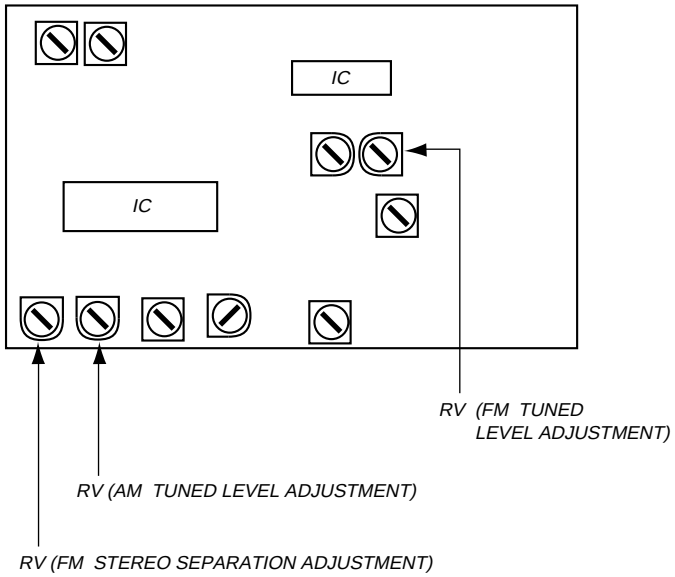

CD SECTION

NOTE :

1. CD Block basically constructed to operate without adjustment. Therefore, check each item in order given.
2. Use YEDS-18 disc (3-702-101-01) unless otherwise indicated.
3. Use the oscilloscope with more than 10MΩ impedance.
4. Clean an object lens by an applicator with neutral detergent when the signal level is low than specified value with the following checks.

Focus Bias Adjustment

This adjustment is to be done when the optical block is replaced.

Adjustment procedure :

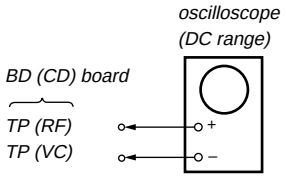

1. Connect oscilloscope to test point TP (VC) and TP (RF) on BD (CD) board.
2. Connect TP ADJ (IC301 ㉘ pin) to ground with lead wire on Main board.
3. Turned power switch ON. (Stop mode)
4. Put disc (YEDS-18) in and press the ▶II button.
5. Press the ▶II button (Tracking servo ON).
6. Adjust RV101 so that the oscilloscope waveform is as shown in the figure below (eye pattern).
   A good eye pattern means that the diamond shape ( ) in the center of the waveform can be clearly distinguished.
7. After adjustment,remove the lead wire connected in step 2.

● RF signal reference waveform (eye pattern)

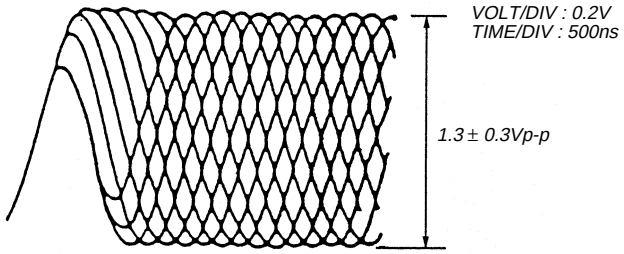

When observing the eye pattern, set the oscilloscope for AC range and raise vertical sensitivity.

Adjustment Location : BD (CD) board. (see page 13)

S-Curve Check

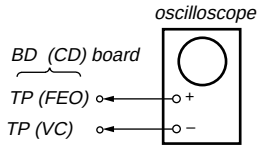

Procedure :

1. Connect oscilloscope to test point TP (VC) and TP (FEO) on BD (CD) board.
2. Connect between test point TP (FOK) and GND by lead wire.
3. Turned Power switch on.
4. Put disc (YEDS-18) in and turned Power switch on again and actuate the focus search. (actuate the focus search when disc table is moving in and out.)
5. Check the oscilloscope waveform (S-curve) is symmetrical between A and B. And confirm peak to peak level within 2.4 ± 0.7Vp-p.

S-curve waveform

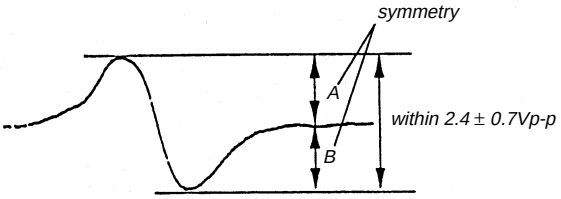

6. After check, remove the lead wire connected in step 2.

Note : ● Try to measure several times to make sure that the ratio of A : B or B : A is more than 10 : 7.
● Take sweep time as long as possible and light up the bright ness to obtain best waveform.

Adjustment Location : BD (CD) board. (see page 13)

RF Level Check

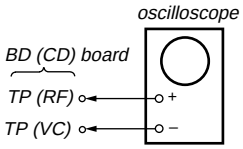

Procedure :

1. Connect oscilloscope to test point TP (VC) and TP (RF) on BD (CD) board.
2. Turned Power switch on.
3. Put disc (YEDS-18) in and press the ▶II button.
4. Confirm that oscilloscope waveform is clear and check RF signal level is correct or not.

Note :

Clear RF signal waveform means that the shape "◊" can be clearly distinguished at the center of the waveform.

● RF signal waveform

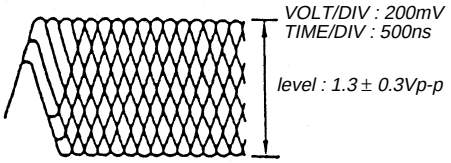

Adjustment Location : BD **(CD)** board. (see page 13)

E-F Balance Check

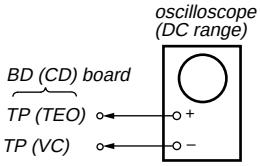

Procedure :

1. Connect TP ADJ (IC301 ㉘ pin) to ground with lead wire on Main board.
2. Connect oscilloscope to test point TP (VC) and TP (TEO) on BD (CD) board.
3. Turned Power switch on.
4. Put disc (YEDS-18) in and press the ▶II button.
5. Confirm that the osilloscope waveform is symmetrical on the top and bottom in relation to 0V, and check this level.

Traverse waveform

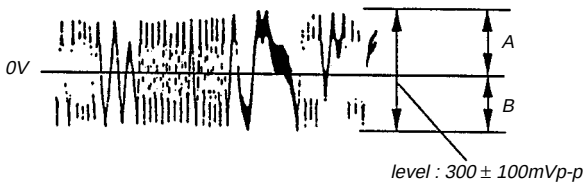

specified value : ● $\frac{A-B}{2\,(A+B)}$ X100 = less than ± 7%

● A+B = 300 ± 100mVp-p

6. Remove the lead wire connected in step 1.

Focus/Tracking Gain Adjustment (RV102, RV103)

This gain has a margin, so even if it is slightly off. There is no problem.
Therefore, do not perform, this adjustment.
Please note that it should be fixed to mechanical center position when you moved and do not know original position.

Adjustment Location

[BD (CD) BOARD] (Conductor side)

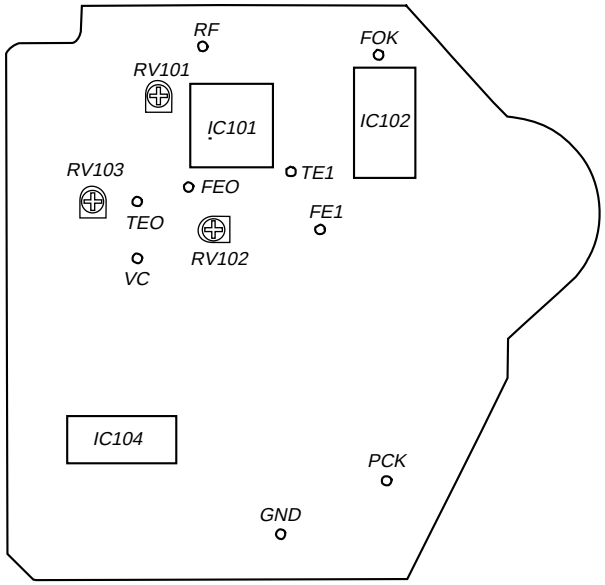

SECTION 7
EXPLANATION OF IC TERMINALS

IC101 RF AMP (CXA1981AR)

Pin No.	Pin name	I/O	Description
1	VC	O	Output terminal for the center point voltage (+1.4V) generated.
2 – 7	A– F	I	Signal input from detector circuit in the optical pick-up block.
8	FI	I	Signal (–) input of the operational amplifier for F signal.
9	FO	O	Signal output of the operational amplifier for F signal.
10	PD	I	Front monitor. Connected to the photo diode.
11	APCREF	I	Input terminal for the setting of laser power.
12	TEMPI	I	Terminal for the connection to temperature sensor.
13	GND	–	Ground terminal.
14	AAPC	O	LD amplifier output terminal of APC circuit.
15	DAPC	O	Not used. (Open)
16	TEMPR	O	Output terminal of thr reference voltage for temperature sensor.
17	XRST	I	Reset signal input from the system controller (IC201). When reset : “L”
18	SWDT	I	Write data signal input from the system controller (IC201).
19	SCLK	I	Clock signal input from the system controller (IC201).
20	XLAT	I	Latch signal input from the system controller (IC201).
21	VREF	O	Reference voltage output. Not used this set (Open)
22	TENV	O	Not used. (Open)
23	THLD	I	Not used. (Connected to the VC)
24	VCC	–	Power supply terminal. (+5V)
25	TFIL	I	Not used. (Open)
26	TE	O	Tracking error signal output to CXD2535BR (IC121).
27	TLB	I	Input terminal of the adder signal to tracking error.
28	CSLED	I	Terminal for the sled error lowpass filter.
29	SE	O	Sled error signal output to CXD2535BR (IC121).
30	ADFM	O	FM signal output terminal of the ADIP.
31	ADIN	I	Input terminal by AC coupling is FM signal of the ADIP.
32	ADAGC	I	External capacitor connect terminal for AGC of the ADIP.
33	ADFG	O	ADIP double turned FM signal output to CXD2535BR (IC121). (22.05kHz±1kHz)
34	AUX	O	Sub signal output to CXD2535BR (IC121).
35	FE	O	Focus error signal output to CXD2535BR (IC121).
36	FLB	I	Not used. (Open)
37	ABCD	O	Light amount signal output to CXD2535BR (IC121).
38	BOTM	O	Light amount bottom hold signal output to CXD2535BR (IC121).
39	PEAK	O	Light amount peak hold signal output to CXD2535BR (IC121).
40	PFAGC	I	External capacitor connect terminal of AGC circuit for the RF.
41	RF	O	Playback EFM RF signal output to CXD2535BR (IC121).
42	ISET	I	Setting terminal for the internal circuit constant. 22kHz, BPF center frequency
43	AGCT	I	Input terminal by AC coupling is RF signal.
44	RFO	O	RF signal output terminal.
45	MORFI	I	Input terminal by AC coupling is RF signal of the MO.
46	MORFO	O	RF signal output terminal of the MO.
47,48	I,J	I	Signal input from detector circuit in the optical pick-up block.

IC201 SYSTEM CONTROLLER (M37610MD-068FP)

Pin No.	Pin name	I/O	Description
1	C. SET1	I	Not used this set. (Fixed at “L”)
2	C. SET0	I	Not used this set. (Fixed at “L”)
3	KEY3	I	Key input terminal. Not used this set (Fixed at “L”)
4 – 6	KEY2–KEY0	I	Key input terminal. Not used this set (Fixed at “L”)
7		I	Not used this set. (Fixed at “L”)
8	XINT	I	Interruption status input from CXD2536R (IC271).
9	SENS	I	Internal status (SENSE) input from CXD2535BR (IC121).
10	SHCK	I	Track jump signal input from CXD2535BR (IC121).
11	AUBK	I	Audio bus signal input. (Not used this set)
12	$\overline{S}$/A	O	Sircs remote controller/audio bus selection signal output. (Not used this set)
13	BEEP SW	I	Not used this set. (Fixed at “L”)
14	$\overline{REC}$/OTHER	O	When recording :“L”, Other : “H” (Not used this set).
15	BEEP	O	Buzzer signal output. (Not used this set)
16	F. BIAS/C2	I	Not used this set. (Fixed at “L”)
17	GND (CNVSS)	–	Ground terminal.
18	SYSTEM RST	I	System reset signal input. “H” after several hundred ms of “L” after power start-up.
19	XIN T	I	Not used this set. (Fixed at “L”)
20	XOUT T	O	Not used this set. (Fixed at “L”)
21	GND	–	Ground terminal.
22	XIN	I	8MHz crystal oscillator input.
23	XOUT	O	8MHz crystal oscillator output.
24	+5V	–	Power supply terminal. (+5V)
25	STB	O	Strobe signal output to the power supply circuit. When power ON :“H”, When standby : “L”
26, 27	MIC SW	I	Not used this set. (Fixed at “L”)
28	BUS OUT	O	Not used this set. (Fixed at “L”)
29		I	Not used this set. (Fixed at “L”)
30, 31	LED2, LED1	I	Not used this set. (Fixed at “L”)
32	LED0	O	Not used this set. (Fixed at “L”)
33	C1	I	Not used this set. (Fixed at “L”)
34	ADER	I	Not used this set. (Fixed at “L”)
35	N. C.	I	Not used this set. (Fixed at “L”)
36	MASTER/SLAVE	I	Not used this set. (Fixed at “H”)
37, 38	JOG1, JOG0	I	Not used this set. (Fixed at “L”)
39	SDA	I/O	Backup memory (IC171) data bus.
40	SCL	O	Clock signal output to the Backup memory (IC171).
41	POWER DOWN	I	Power down detection input. Normally : “H” input
42	REMOCON	I	Remote control signal input. Not used this set (Fixed at “L”)
43	ATSY	I	ATP address sync or sub-code Q sync (SCOR) input from CXD2535BR (IC121). “L” every 13.3msec, Almost “H”
44	DQSY	I	Input the U-bit CD format sub-code Q sync (SCOR) of the digital in from CXD2535BR (IC121). “L” every 13.3msec, Almost “H”
45 – 48		I	Not used this set. (Fixed at “L”)
49	SCLK	O	Clock signal output to the serial bus.

Pin No.	Pin name	I/O	Description
50	SWDT	O	Write data signal output to the serial bus.
51	SRDT	I	Read data signal input to the serial bus.
52		I	Connected to the pin ㊺.
53	FLCLK	O	Serial clock signal output to the display driver (IC701). Not used this set (Fixed at “L”)
54	FLDATA	O	Serial data signal output to the display driver (IC701). Not used this set (Fixed at “L”)
55	FLCS	O	Chip select signal output to the display driver (IC701). Not used this set (Fixed at “L”)
56		I	Not used. (Fixed at “L”)
57	TEST0	I	Terminal for test. (Fixed at “L”)
58	TEST1	O	Reset signal output to CXD2536R (IC271).
59, 60		I	Not used. (Fixed at “L”)
61	AFAST	I	Not used this set. (Fixed at “L”)
62	$\overline{16}$/18	I	16bit/18bit selector. “H” : 16bit
63	LDON	O	Laser ON/OFF control signal output.When laser ON : “H”
64	P/GROOVE	I	PIT/GROOVE detection input.“H” : Disc for playing and TOC area. Not used this set (Fixed at “L”)
65	FOK	I	Focus OK signal input from CXD2535BR (IC121). “H” is input when the focus is applied.
66	MON	I	Not used this set. (Input and the pull-down)
67	LOCK	O	Not used this set. (Output and the pull-down)
68	WRPWR	O	Laser power selection signal output to the optical pick-up block and CXD2535BR (IC121).
69	DIG RST	O	Reset signal output to CXA1981R (IC101), CXD2535BR (IC121), and the motor driver (IC151).When reset : “L”
70	DA RST	O	Reset signal output to D/A converter (IC341) and the A/D converter (IC301). When reset : “L”
71, 72	SCMD 1, SCMD 0	O	Serial command control mode signal output to CXD2536R (IC271).
73	MOD	O	Laser modulation selection signal output. When playback power : “L”,When stop : “H” When recording power : 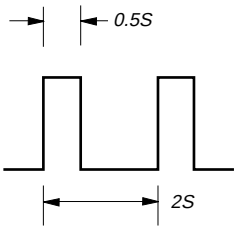
74	REC/PB	O	Recording/playback selection signal output to CXD2535BR (IC121). When recording : “H” ,When playback : “L”
75	WR/MN	O	Write/monitor mode selection signal output to CXD2536R (IC271).
76	SCTX	O	Writing data transmission timing output to CXD2536R (IC271). Used together with the magnetic field head ON/OFF output.
77	XLATCH	O	Latch signal output to the serial bus.
78	DFLATCH	O	Latch signal output to the D/A converter (IC341).
79	DFMUTE	O	Muting signal output. Not used this set. (Connected to the Ground)

Pin No.	Pin name	I/O	Description
80	AMUTE	O	Line out muting signal output.
81	LDOUT	O	Loading motor (M191) control output. *1
82	LDIN	O	Loading motor (M191) control output. *1
83	CHKIN	I	Detection signal input from the chucking in switch (S193). When chucking : “L”
84	INSW	I	Detection signal input from the loading in switch (S192). “L” at the position where the head descends, Others : “H”
85	OUTSW	I	Detection signal input from the loading out switch (S191). “L” at the position of load out, Others : “H”
86	PROTECT	I	Rec proof detection signal input from the protect detector switch (S102-1). When protect : “H”
87	REFLECT	I	Disc reflection rate detection signal input from the reflect detector switch (S102-2). “H” : Low reflection rate disc
88	LIMIT IN	I	Detection signal input from the limit in switch (S101). When sled limit in : “L”
89	232C. 4	O	UART data transmission request signal output to mPD78052G (IC301)
90	232C. 3	I	UART data transmission reqeust signal input from mPD78052G (IC301)
91	232C. 2	I	UART data input from mPD78052GC (IC301)
92	232C. 1	O	UART data output to mPD78052GC (IC301)
93–96		O	Not used (Fixed at “L”).
97	AVSS (AGND)	–	Ground terminal.
98	VREF (+5V)	I	Reference voltage input (+5V)
99	TIMER REC/PLAY	I	Timer record /time playback/time OFF selection signal input terminal. When timer recording : “H”, When timer playback : “L”, When timer OFF : Center point voltage (+2.5V) Not used this set (Fixed at “L”)
100	INPUT SELECT	I	Analog/digital in selection signal input terminal When analog in : “L”, When digital in : “H” Not used this set (Fixed at “L”)

* 1 Loading motor control

Mode / Terminal	IN	OUT	BRAKE
LDIN pin ㊷	“H”	“L”	“H”
LDOUT pin ㊶	“L”	“H”	“H”

IC271 SHCCK PROOF MEMORY CONTROLLER, ATRAC ENCODER/DECODER (CXD2536R)

Pin No.	Pin name	I/O	Description
1	VDD	–	Power supply terminal. (+5V)
2	SWDT	I	Write data signal input from the system controller (IC201).
3	SCK	I	Serial clock signal input from the system controller (IC201).
4	XLAT	I	Serial latch signal input from the system controller (IC201).
5	SRDT	O	Read data signal output to the system controller (IC201).
6	SENSE	O	Internal status (SENSE) output to the system controller (IC201).
7	SCMD0	I	Serial command control mode input from the system controller. (Fixed at “H”)
8	SCMD1	I	Serial command control mode input from the system controller. (Fixed at “H”)
9	XINT	O	Interruption status output to the system controller (IC201).
10	RCPB	I	Record/playback selection signal input. Not used this set. (Fixed at “L”)
11	WRMN	I	Write/monitor mode selection signal input from the system controller (IC201).
12	TX	–	Writing data transmission timing input from the system controller (IC201). Used together with the magnetic field head ON/OFF output.
13	VSS	–	Ground terminal.
14	SICK	I	Chip reserve terminal. (Fixed at “L”)
15	IDSL	I	Chip reserve terminal. (Fixed at “L”)
16	XILT	I	Chip reserve terminal. (Fixed at “H”)
17	XRST	I	Reset signal input from the system controller (IC201). When reset : “L”
18–21	TS0–TS3	I	Test input terminal. (Fixed at “L”)
22	EXIR	I	Chip reserve terminal. (Fixed at “L”)
23	SASL	I	Single use the block selection. “L” : ATRAC, “H” : RAM Controller (Fixed at “L”)
24	SNGLE	I	Normally fixed at “L”, Fixed at “H” when the ATRAC or RAM controller is single used. (Fixed at “L”)
25	VSS	–	Ground terminal.
26	AIRCPB	O	Record/playback mode signal output terminal of the ATRAC or external audio block. Not used this set.
27	XRQ	I/O	XRQ signal input/output terminal of the ATRAC interface. Not used this set.
28	ADTO	I/O	Decoder data signal input/output terminal of the ATRAC. Not used this set.
29	ADTI	I/O	Encoder data signal input/output terminal of the ATRAC. Not used this set.
30	XALT	I/O	XALT signal input/output terminal of the ATRAC interface. Not used this set.
31	ACK	I/O	ACK signal input/output terminal of the ATRAC interface. Not used this set.
32	AC2	I/O	Error data signal input/output terminal of the ATRAC interface. Not used this set.
33	LCHST	I/O	Lch Start data signal input/output terminal of the ATRAC interface. Not used this set.
34	EXE	I/O	EXE signal input/output terminal of the ATRAC interface. Not used this set.
35	MUTE	I/O	MUTE signal input/output terminal of the ATRAC interface. Not used this set.
36	OSCO	O	45MHz clock oscillation output. (45MHz)
37	OSCI	I	45MHz clock oscillation input. (45MHz)
38	VSS	–	Ground terminal.
39	ATT	I/O	ATT signal input/output terminal of the ATRAC interface. Not used this set.
40	F86	O	11.6msec timing signal output terminal of the ATRAC block. Not used this set.
41	DOUT	O	Monitor/audio decode data signal output to the D/A converter (IC281).
42	ADIN	I	Recoding data signal input from the D/A converter (IC261).
43	ABCK	O	Bit clock signal output to the A/D, D/A converter (IC261, 281).
44	ALRCK	O	L/R clock signal output to the A/D, D/A converter (IC261, 281).
45-47	SA2-SA0	O	Address signal output. Not used this set (OPEN)
48,49	A11,A10	O	Address signal output. Not used this set

Pin No.	Pin name	I/O	Description
50	VSS	–	Ground terminal.
51	VDD	–	Power supply terminal. (+5V)
52– 55	A03– A00	O	Address signal output to the RAM (IC222)
56– 60	A04– A08	O	Address signal output to the RAM (IC222)
61	XOE	O	Output enable control signal output to the RAM (IC222).
62	XCAS	O	Column address strobe signal output to the RAM (IC222).
63	VSS	–	Ground terminal.
64	XCS	O	Chip select signal output. Not used this set
65	A09	O	Address signal output to the RAM (IC222).
66	XRAS	O	Row address strobe signal output to the RAM (IC222).
67	XWE	O	Write enable control signal output to the RAM (IC222).
68,69	D1, D0	I/O	RAM (IC222) data bus.
70,71	D2,D3	I/O	RAM (IC222) data bus.
72–74	D4–D6	I/O	Data bus. Not used this set (OPEN)
75	VSS	–	Ground terminal.
76	D7	I/O	Data bus. Not used this set (OPEN)
77	ERR	I/O	Input/output terminal of the error (C2PO) data signal to the external RAM. Not used this set (OPEN)
78	EXTC2R	I	External RAM selection signal input for the error data writing. (When “H” : External RAM) (Fixed at “L”).
79	BUSY	O	BUSY signal output of the RAM access. Not used this set (OPEN)
80	EMP	O	Empty or before the full of the ATRAC data. (When DSC=ASC+1 : “H”). Not used this set.
81	FUL	O	Full or before the empty of the ATRAC data. (When ASC=DSC+1 : “H”). Not used this set.
82	EQL	O	Empty of the ATRACK data. (when DSC=ASC : “H”). Not used this set.
83	MDLK	O	Indicate the main/sub of the recording or playback data. (When sub and linking : “H” , When the main : “L”). Not used this set.
84	CPSY	O	Interpolation sync signal output. Not used this set.
85	CTMD0	O	DSC counter mode output. Not used this set.
86	CTMD1	O	DSC counter mode output. Not used this set.
87	SPO	O	System clock (512Fs=22.5792MHz) signal output to CXD2535BR (IC121).
88	VSS	–	Ground terminal.
89	MDSY	O	Sync detection signal output of the main data. Not used this set.
90	LRCK	I	L/R clock (44.1kHz) signal input from CXD2535BR (IC121).
91	BCK	I	Bit clock (2.8224MHz) signal input from CXD2535BR (IC121).
92	C2PO	I	C2PO (indicate the error mode of the data) signal input from CXD2535BR (IC121). When playback : C2PO (“H”), When digital recording : D. IN-Vflag, When analog recording : “L”
93	DATA	I/O	When recording : Record audio data signal output to CXD2535BR (IC121). When playback : playback audio data signal input from CXD2535BR (IC121).
94	DIDT	I	16-bit data input terminal for the digital audio in from the CXD2535BR(IC121).
95	DODT	O	16-bit data output terminal for the digital audio out from the CXD2535BR (IC121).
96	DIRCPB	O	Disc drive, Record or playback mode output of the EFM encoder/decoder. Not used this set (Open)
97	MIN	I	Defect ON/OFF selection signal input from CXD2535BR (IC121).
98	SPOSL	I	IN/OUT selection input terminal of the pin ⑧⑦. (“L” : IN, “H” : OUT) (Fixed at “H”)
99	MCKT1	O	Internal master clock signal output terminal of the RAM controller. Not used ths set.
100	VSS	–	Ground terminal.

IC301 MASTER CONTROL (μPD78058GC-243-3B9)

Pin No.	Pin name	I/O	Description
1	LID SW	I	LID switch input (OPEN, CLOSE, SHUT switch).
2	MD RESET	I	Reset input for MD.
3		I	CADY sensor input terminal.
4	AVSS	–	Ground.
5	LID-OPEN	O	LID motor control output (open direction).
6	LID CLS	O	LID motor control output (close direction).
7		–	Not used.
8	DATA IN	I	Serial data input from MD.
9	DATA OUT	O	Serial data output to MD.
10	CTS	I	Clock input from ⑧ , ⑨ pin.
11	RTS	O	Clock output to ⑧ , ⑨ pin.
12	SDATA	O	Serial data output to FL driver.
13	SCK	O	Clock output to FL driver.
14	$\overline{\text{CS}}$	O	Chip selector output to FL driver.
15	REST	O	Reset output to FL driver.
16	SUBQ	I	SUB “Q” input from CD.
17	OPEN	–	Not used.
18	SQCLK	O	SUB “Q” clock output to CD.
19	CCLOK	O	Master clock output to CD.
20	DATA	O	Data output to CD.
21	XLT	O	Latch output to CD.
22	DFLATCH	O	Latch output to CD digital filter.
23	FCSSW	O	output to Focus SW.
24	A MUTE	–	Not used.
25	BDRST	O	Reset output to CD.
26	$\overline{\text{CD POWER}}$	O	CD Block Power ON/OFF. (“H” : ACT)
27	SENS	I	Sens input from CD.
28	ADJ	I	Terminal for test mode. (“L” : Test mode)
29	IN SW	I	LOAD IN Switch input. (close)
30	OUT SW	I	LOAD OUT Switch input. (open)
31	LOD IN	O	Loading Motor drive output. (open direction)
32	LOD OUT	O	Loading Motor drive output. (close direction)
33	VSS	–	Ground.
34		–	Not used. (open)
35		–	Not used. (open)
36	$\overline{\text{SYS POWER}}$	O	System power ON / OFF control. (“L” : power ON)
37		–	Not used.
38	$\overline{\text{ST POWER}}$	O	ST Power ON / OFF control. (“L” : ST ON)
39	$\overline{\text{TAPE}}$	–	Not used.
40		–	Not used.
41		–	Not used.
42	STEREO	I	Stereo Signal input from ST block.
43	TUNED	I	Tuned Signal input from ST block.
44	DATA IN	I	Serial data input from ST block.
45	DATA OUT	O	Serial data output to ST block.
46	CLOCK	I/O	Clock input / output of the ST block.

Pin No.	Pin name	I/O	Description
47	CE	O	Chip enable output to ST block.
48	CE	O	Chip enable output to IC101 (CXA1946Q).
49	CLOCK	O	Clock output to IC101 (CXA1946Q).
50	DATA	O	Serial data output to IC101 (CXA1946Q).
51	TA MUTE	O	Mute signal output to AMP. “L” : Mute
52	AUX ATT	O	Attenuation output for when AUX input. “L” : ATT
53	MIC DET	–	Not used.
54	CLEAR	O	Reset output to LED driver.
55	LATCH	O	Latch output to LED driver.
56	CLOCK	O	Clock output to LED driver.
57	DATA	O	Data output to LED driver.
58	SIRCS	I	SIRCS signal input terminal.
59	AC-DET	I	AC detection terminal.
60	CST	I	System reset terminal.
61	AUB I	–	Not used. (Ground connection)
62	AUB O	–	Not used. (Ground connection)
63	ENC	I	Input terminal from encoder.
64	ENC	I	Input terminal from encoder.
65			Not used.
66	FAN	I	FAN input terminal.
67	SCOR	I	SCOR input from BD.
68	VDD	–	Power supply. (+5 V)
69	X2	O	MICOM clock output terminal. (5.0 MHz)
70	X1	I	MICOM clock input terminal. (5.0 MHz)
71	GND	–	Ground.
72	XT2	O	Clock output for timer. (3.0 kHz)
73	XT1	I	Clock input for timer. (3.0 kHz)
74	AVDD	–	Power supply for Analog. (+5 V)
75	AVREFO	–	Reference Voltage output for Analog. (+5 V)
76	K0	I	Key input.
77	K1	I	Key input.
78	K2	I	Key input.
79	K3	I	Key input.
80	VER	I	Input terminal for Virsion Select.

SECTION 8
DIAGRAMS

8-1. BLOCK DIAGRAM – MAIN SECTION –

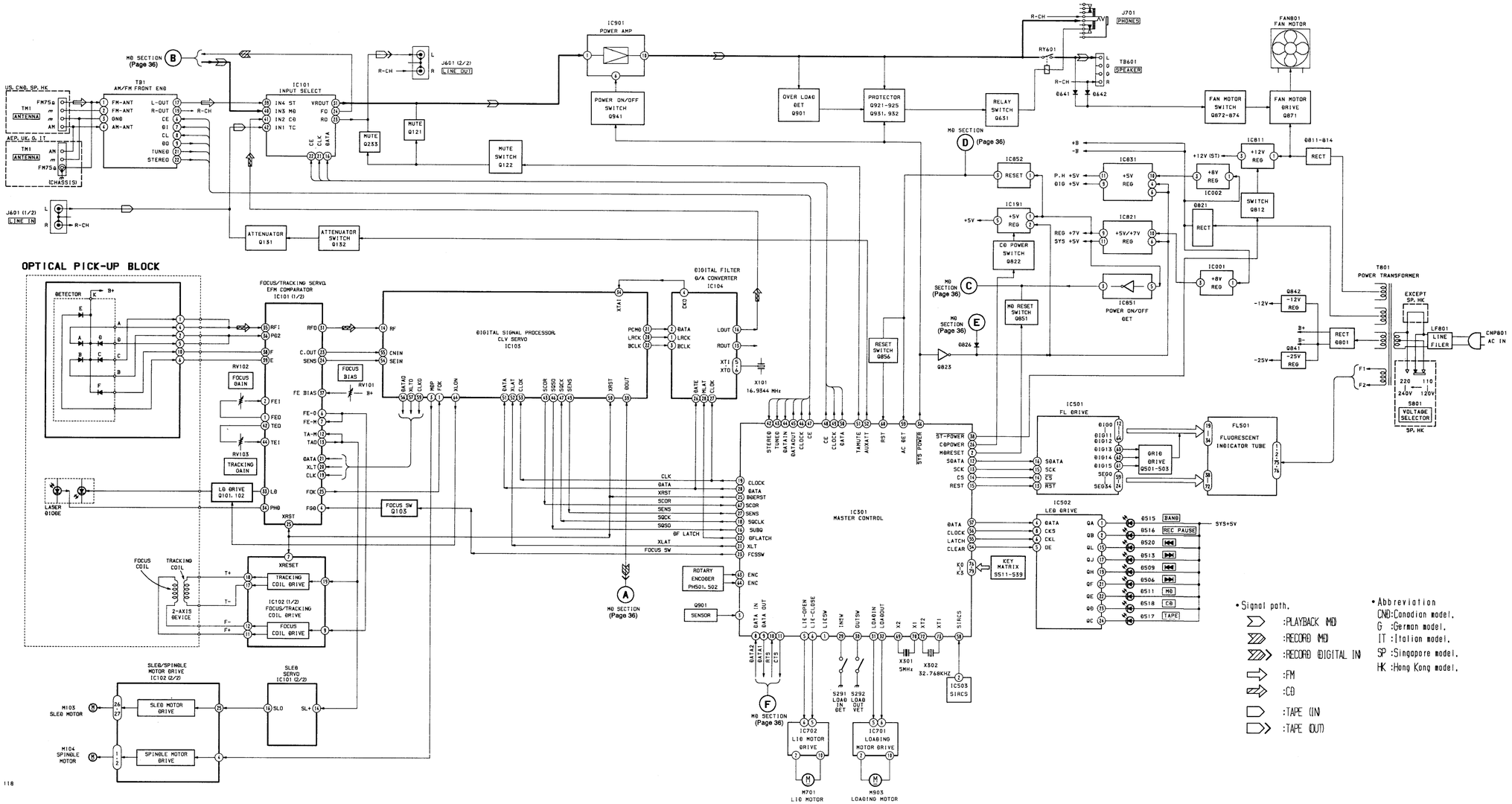

8-2. BLOCK DIAGRAM – MD SECTION –

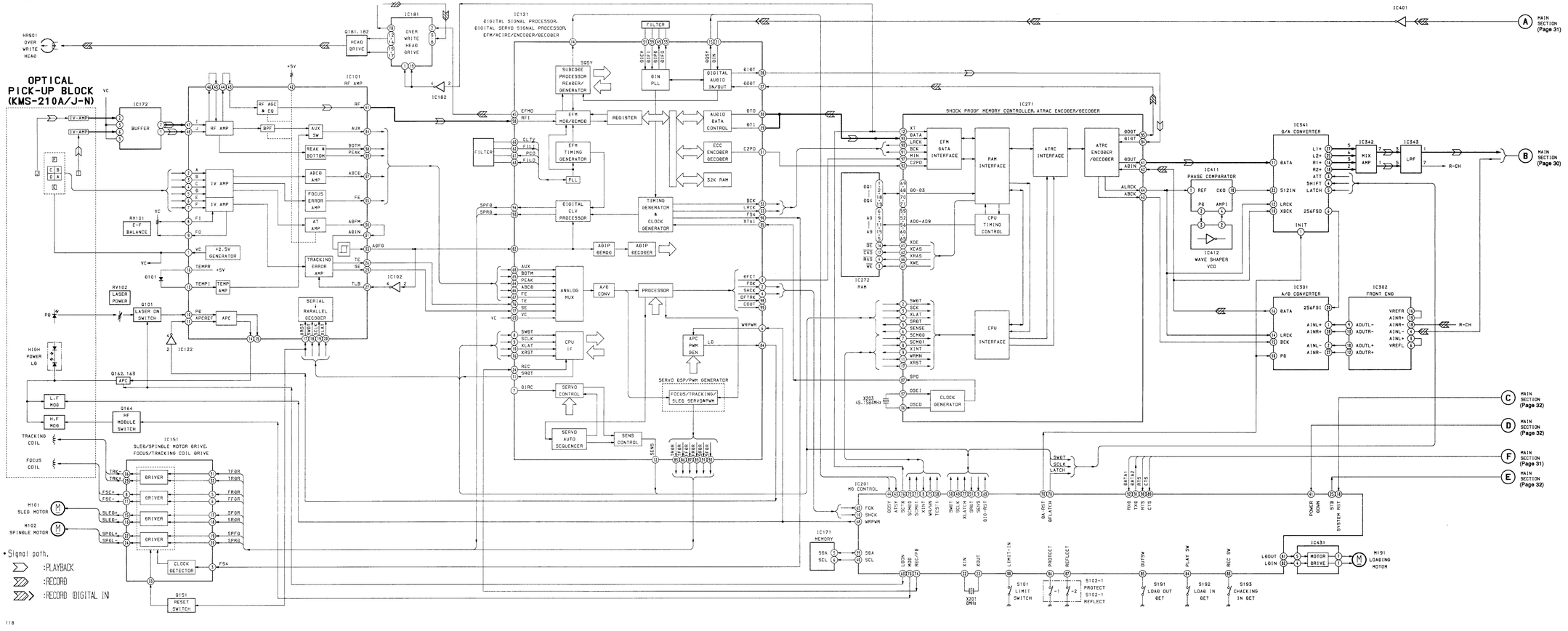

118

8-3. CIRCUIT BOARDS LOCATION

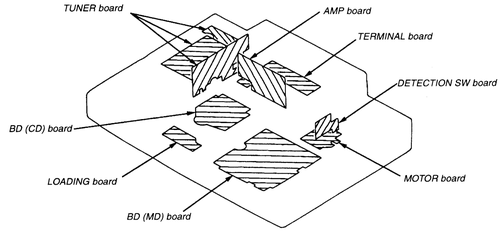

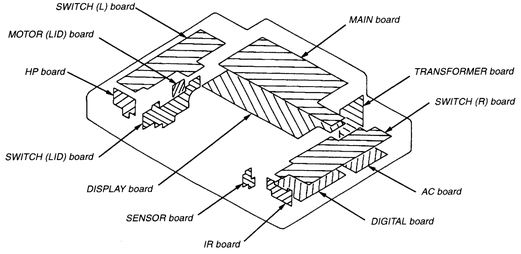

● SEMICONDUCTOR LOCATION

Ref. No.	Location	Ref. No.	Location
D301	E-16	IC821	B-12
D631	G-2	IC831	C-13
D641	G-4	IC851	D-12
D642	G-4	IC852	E-13
D801	B-10	IC901	C-3
D811	B-12		
D812	B-12	Q121	B-7
D813	B-13	Q122	D-10
D814	B-13	Q131	C-6
D815	E-9	Q132	C-10
		Q133	C-7
D821	C-14	Q221	B-6
D822	E-10	Q231	C-6
D825	D-12	Q233	C-7
D826	E-13	Q631	G-2
D841	C-12	Q811	C-11
D842	C-11	Q812	C-11
D851	D-12	Q821	C-12
D852	D-13	Q822	C-11
D853	D-13	Q823	D-11
D854	D-13	Q841	B-12
D855	D-13	Q842	B-12
D856	E-12	Q851	E-13
D861	B-12	Q852	D-12
D862	B-12	Q871	D-14
D863	C-12	Q872	D-14
D871	D-14	Q873	C-14
D872	D-14	Q874	D-14
D901	B-4	Q901	B-4
D951	B-4	Q921	B-5
D9001	I-7	Q922	B-5
D9002	H-9	Q923	A-5
		Q924	B-4
		Q925	A-4
IC001	A-14	Q931	C-5
IC002	B-14	Q932	B-5
IC101	C-8		
IC301	E-10	Q941	A-3
IC811	C-11	Q951	B-4

Note:

- ○—— : parts extracted from the component side.
- —— : parts extracted from the conductor side.
- ▒ : Pattern from the side which enables seeing. (The other layers' patterns are not indicated)

• Abbreviation
CND : Canadian
G : German
IT : Italian
SP : Singapore
HK : Hong Kong

8-4. PRINTED WIRING BOARDS – MAIN SECTION –

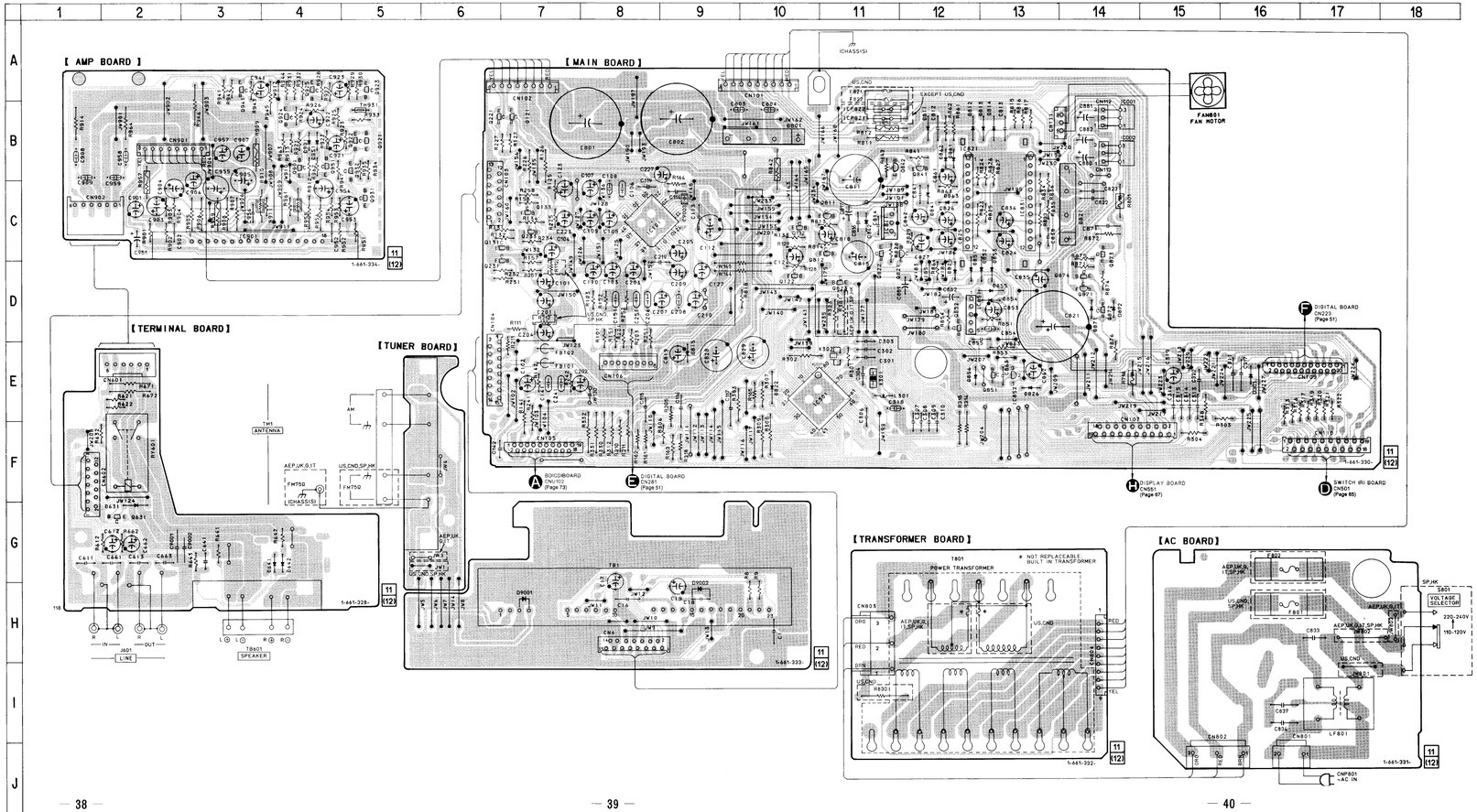

8-5. SCHEMATIC DIAGRAM – MAIN SECTION –

● Refer to page 75 for IC Block Diagrams.

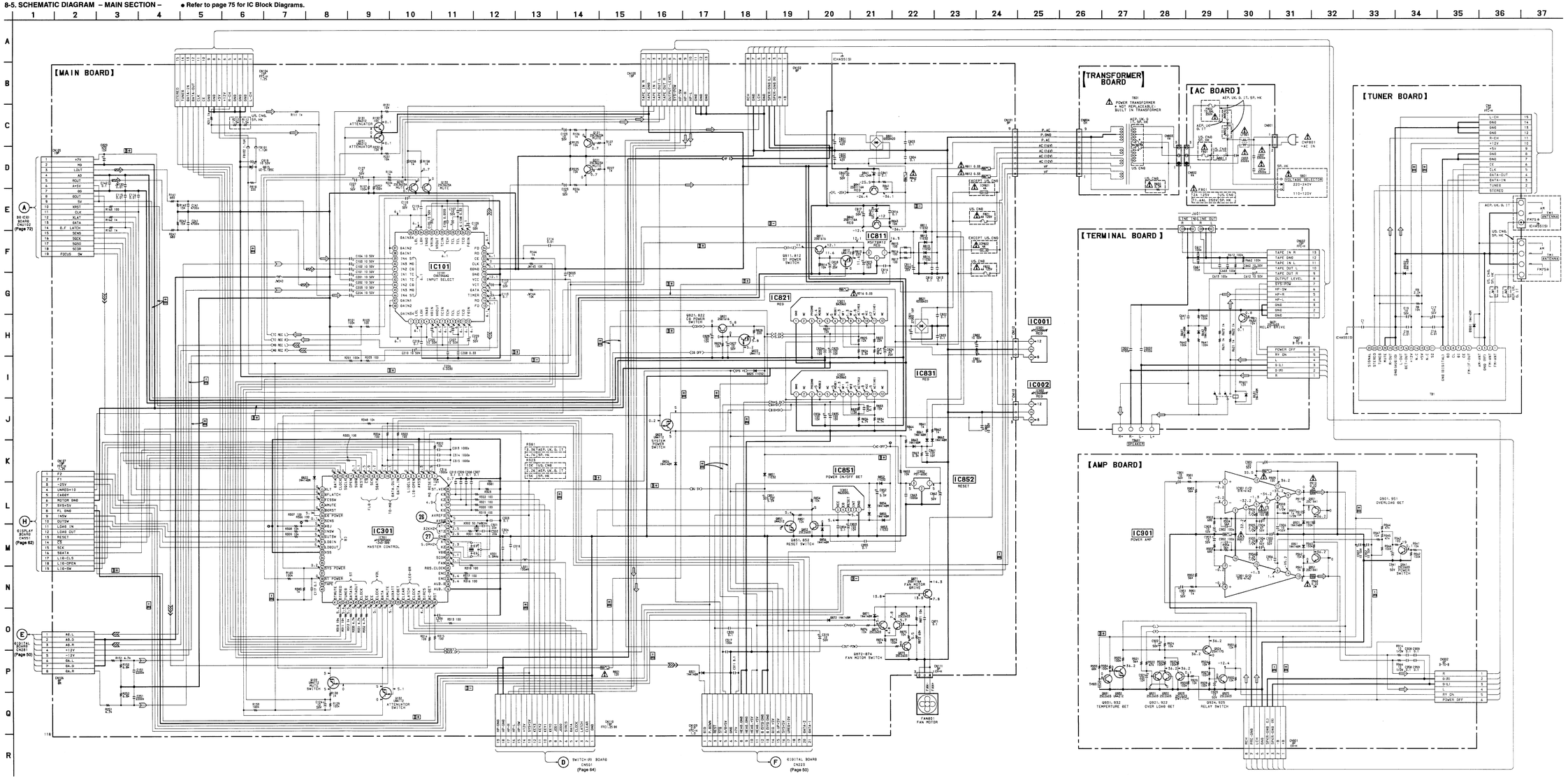

● WAVEFORMS – MAIN SECTION –

(26) 1.94Vp-p 32.7kHz IC301 ⑲

(27) 3.44Vp-p 5MHz IC301 ⑳

Note :

- All capacitors are in μF unless otherwise noted. pF: μμF 50WV or less are not indicated except for electrolytics and tantalums.
- All resistors are in Ω and ¼W or less unless otherwise specified.
- Δ : internal component.
- ▭ : nonflammable resistor.
- ▭ : fusible resistor.
- ▭ : panel designation.

Note :	Note :
The components identified by mark Δ or dotted line with mark Δ are critical for safety. Replace only with part number specified.	Les composants identifiés par une marque Δ sont critiques pour la sécurité. Ne les remplacer que par une pièce portant le numéro spécifié.

- B+ : B+ Line
- B− : B− Line
- Voltage and waveforms are dc with respect to ground under no-signal (detuned) conditions. no mark : FM
- Voltages are taken with a VOM (Input impedance 10MΩ). Voltage variations may be noted due to normal production tolerances.
- Waveforms are taken with a oscilloscope. Voltage variations may be noted due to normal production tolerances.
- Circled numbers refer to waveforms.
- Signal path.
  - : FM
  - : PB (MD)
  - : CD
  - : REC (MD)
  - : REC (DIGITAL IN)
- Abbreviation
  - CND : Canadian
  - G : German
  - IT : Italian
  - SP : Singapore
  - HK : Hong Kong

● IC BLOCK DIAGRAMS – DIGITAL SECTION –

IC272 M5M44400BJ-7-L2

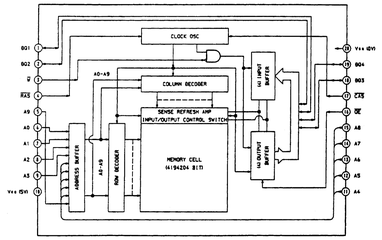

IC431 BA6287F

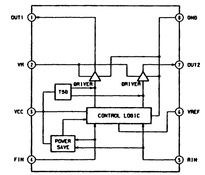

IC301 CXD8566M

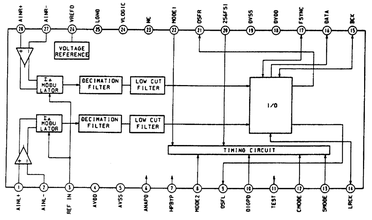

IC302 CXA8054M

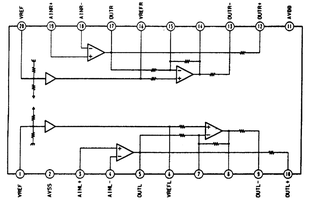

IC341 CXD8567AM

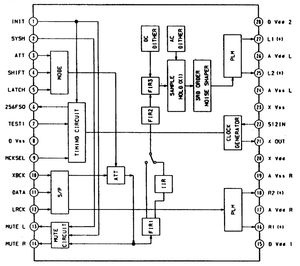

● WAVEFORMS – DIGITAL SECTION –

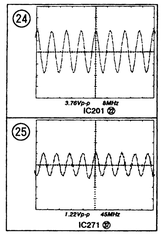

Note :

- All capacitors are in μF unless otherwise noted. pF: μμF 50WV or less are not indicated except for electrolytics and tantalums.
- All resistors are in Ω and ¼W or less unless otherwise specified.
- % : indicates tolerance.
- Δ : internal component.
- B+ : B+ Line
- B− : B− Line
- Voltage and waveforms are dc with respect to ground under no-signal (detuned) conditions.
  no mark : STOP (MD) (( )) : LOAD IN
  ( ) : PB (MD) ≪ ≫ : LOAD OUT
  ( ) : REC (MD)
- Voltages are taken with a VOM (Input impedance 10MΩ). Voltage variations may be noted due to normal production tolerances.
- Waveforms are taken with a oscilloscope. Voltage variations may be noted due to normal production tolerances.
- Circled numbers refer to waveforms.
- Signal path.
  ▷ : PB (MD)
  ▷▷ : REC (MD)
  ▷▷▷ : REC (DIGITAL IN)

8-6. SCHEMATIC DIAGRAM – DIGITAL SECTION –

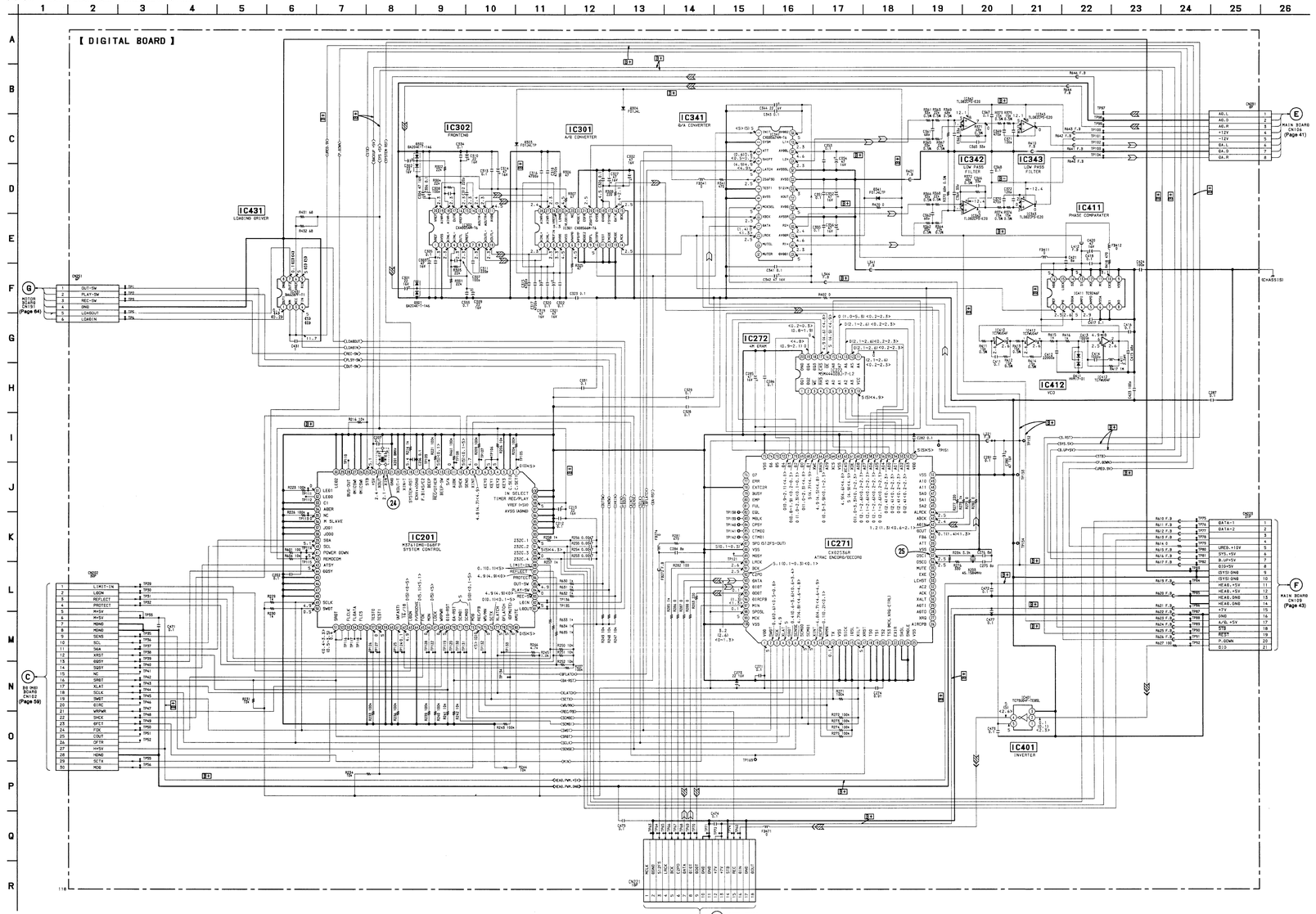

【DIGITAL BOARD】(SIDE A)

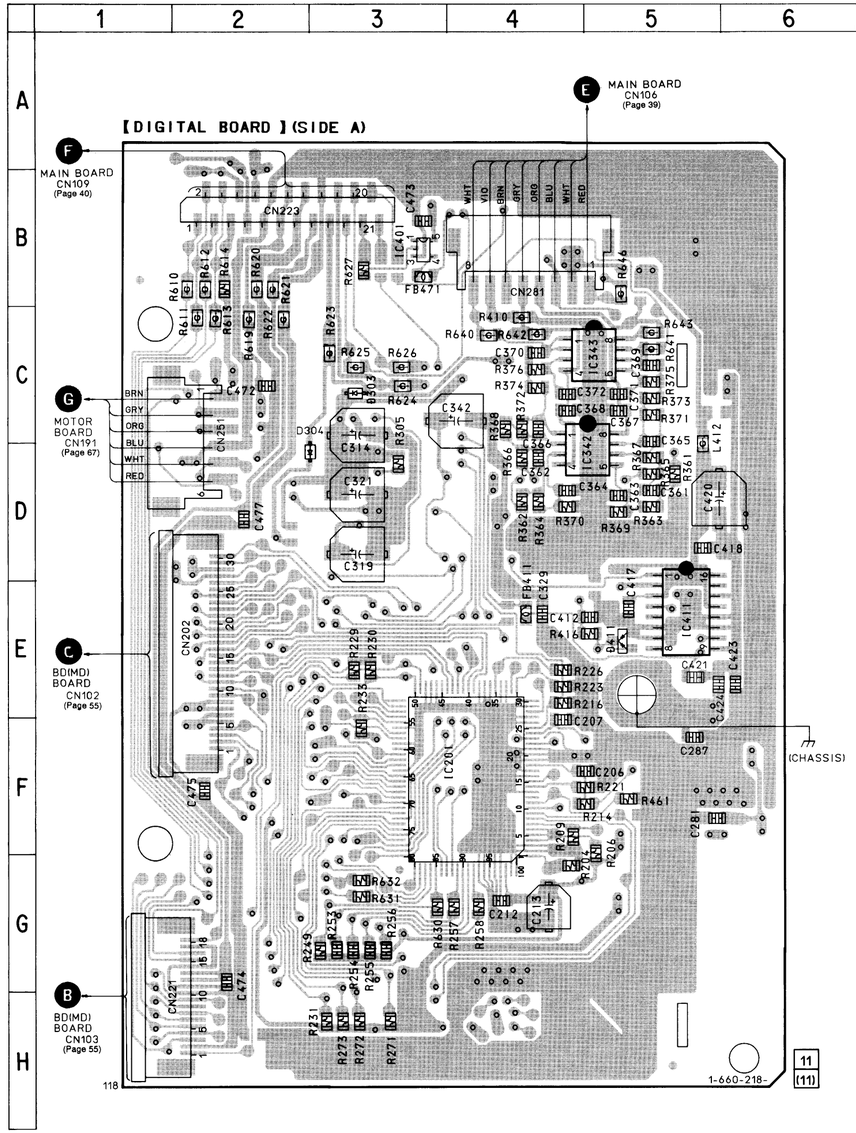

【DIGITAL BOARD】(SIDE B)

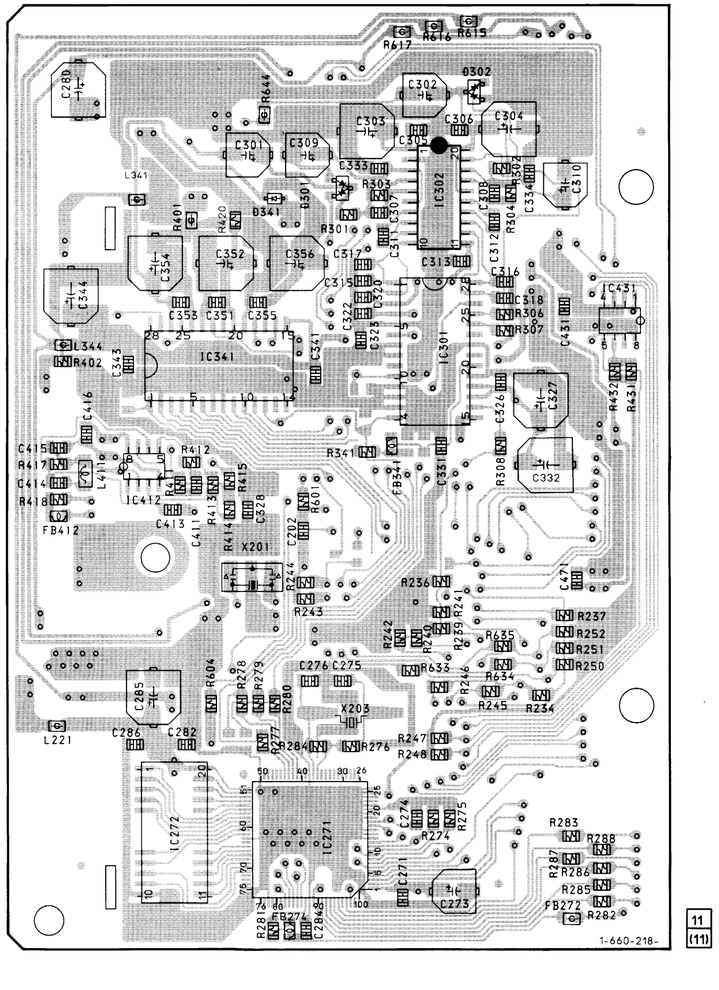

● SEMICONDUCTOR LOCATION

Ref. No.	Location
D301	C-10
D302	B-10
D303	C-3
D304	D-3
D341	C-9
D411	E-5
IC201	F-4
IC271	G-9
IC272	G-8
IC301	D-10
IC302	C-10
IC341	D-9
IC342	D-5
IC343	C-5
IC401	B-3
IC411	E-5
IC412	E-8
IC431	D-12

Note:

- ——— : parts extracted from the conductor side.
- ◯ : Through hole.
- △ : internal component.
- ▒ : Pattern from the side which enables seeing. (The other layers' patterns are not indicated)

8-8. PRINTED WIRING BOARDS – BD : MD SECTION –

● SEMICONDUCTOR LOCATION

Ref. No.	Location
D101	C-6
D155	F-11
D161	B-9
D181	C-2
D183	C-2
IC101	D-10
IC102	D-11
IC121	G-10
IC122	D-9
IC151	G-12
IC171	D-8
IC172	C-10
IC181	C-12
IC182	C-11
IC191	G-5
Q101	B-9
Q151	F-12
Q162	C-10
Q163	B-8
Q164	B-8
Q181	C-1
Q182	C-1

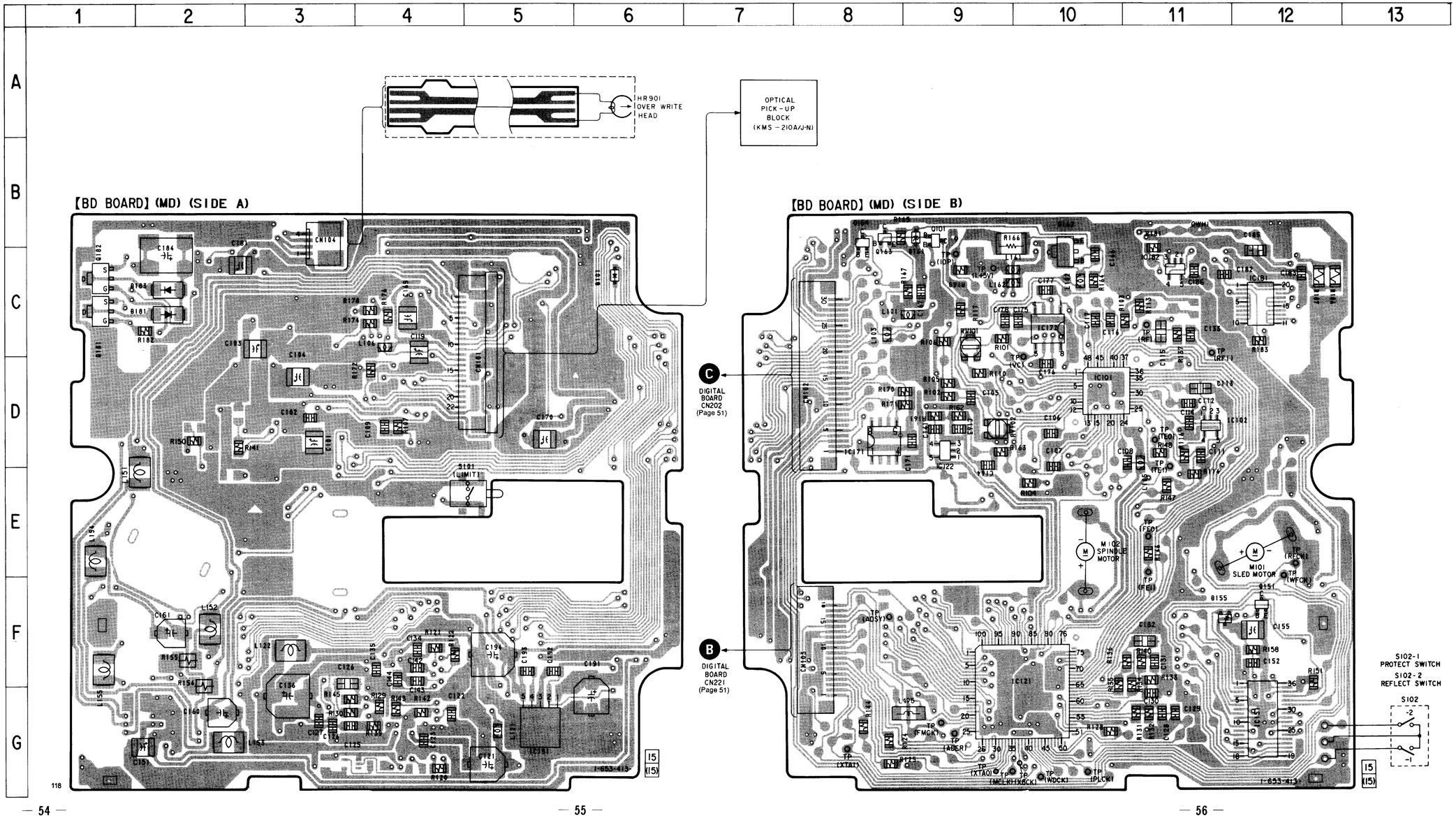

Note:
- ○— : parts extracted from the component side.
- —— : parts extracted from the conductor side.
- ◯ : Through hole.
- ▒ : Pattern from the side which enables seeing. (The other layers' patterns are not indicated)

8-9. SCHEMATIC DIAGRAM – BD : MD SECTION –

● Refer to page 68 for Waveforms. ● Refer to page 75 for IC Block Diagrams.

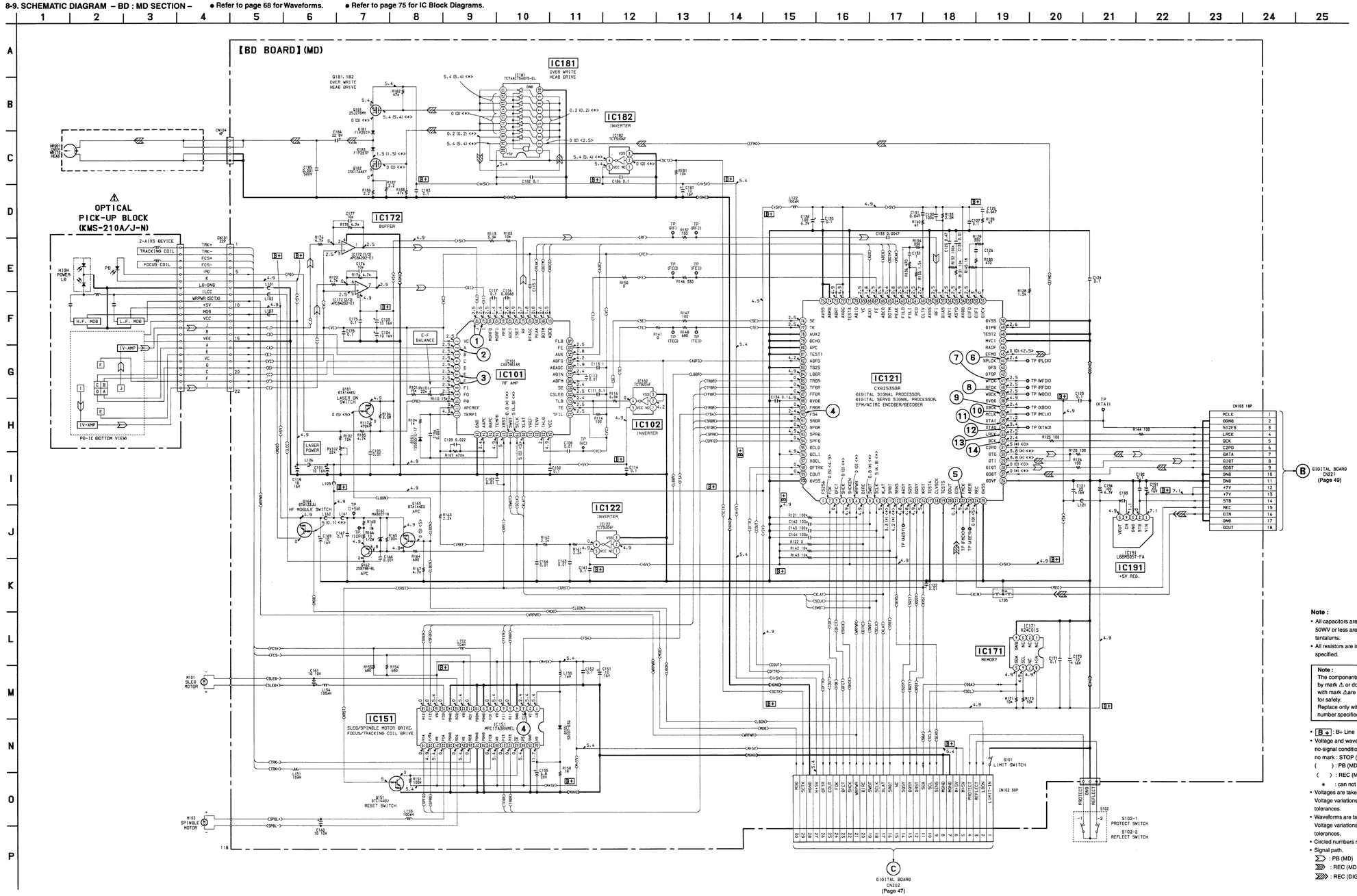

Note :

- All capacitors are in μF unless otherwise noted. pF: μμF 50WV or less are not indicated except for electrolytics and tantalums.
- All resistors are in Ω and ¼ W or less unless otherwise specified.

Note :	Note :
The components identified by mark ⚠ or dotted line with mark ⚠are critical for safety. Replace only with part number specified.	Les composants identifiés par une marque ⚠sont critiques pour la sécurité. Ne les remplacer que par une pièce portant le numéro spécifié.

- B+ : B+ Line
- Voltage and waveforms are dc with respect to ground under no-signal conditions.
  no mark : STOP (MD)
  ( ) : PB (MD)
  〈 〉 : REC (MD)
  ✱ : can not be measured
- Voltages are taken with a VOM (Input impedance 10MΩ). Voltage variations may be noted due to normal production tolerances.
- Waveforms are taken with a oscilloscope. Voltage variations may be noted due to normal production tolerances.
- Circled numbers refer to waveforms.
- Signal path.
  : PB (MD)
  : REC (MD)
  : REC (DIGITAL IN)

● IC BLOCK DIAGRAMS – DISPLAY SECTION –

IC501 M66004M8FP

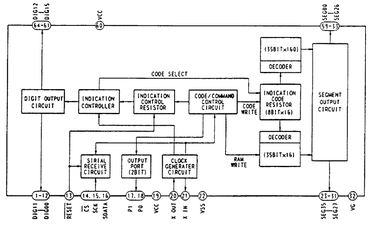

IC502 M66311FP

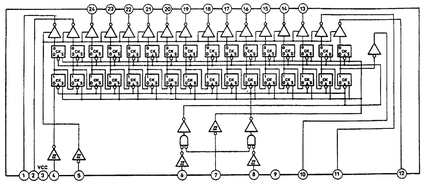

IC701, 702 LB1641

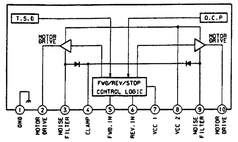

Note :

- All capacitors are in μF unless otherwise noted. pF: μμF 50WV or less are not indicated except for electrolytics and tantalums.
- All resistors are in Ω and ¼W or less unless otherwise specified.
- ▭ : panel designation.
- B+ : B+ Line
- B− : B− Line
- Voltage are dc with respect to ground under no-signal (detuned) conditions. no mark : FM
- Voltages are taken with a VOM (Input impedance 10MΩ). Voltage variations may be noted due to normal production tolerances.
- Signal path. ⇨ : FM
- Abbreviation
  - GND : Canadian
  - G : German
  - IT : Italian
  - SP : Singapore
  - HK : Hong Kong

8-10. SCHEMATIC DIAGRAM – DISPLAY SECTION –

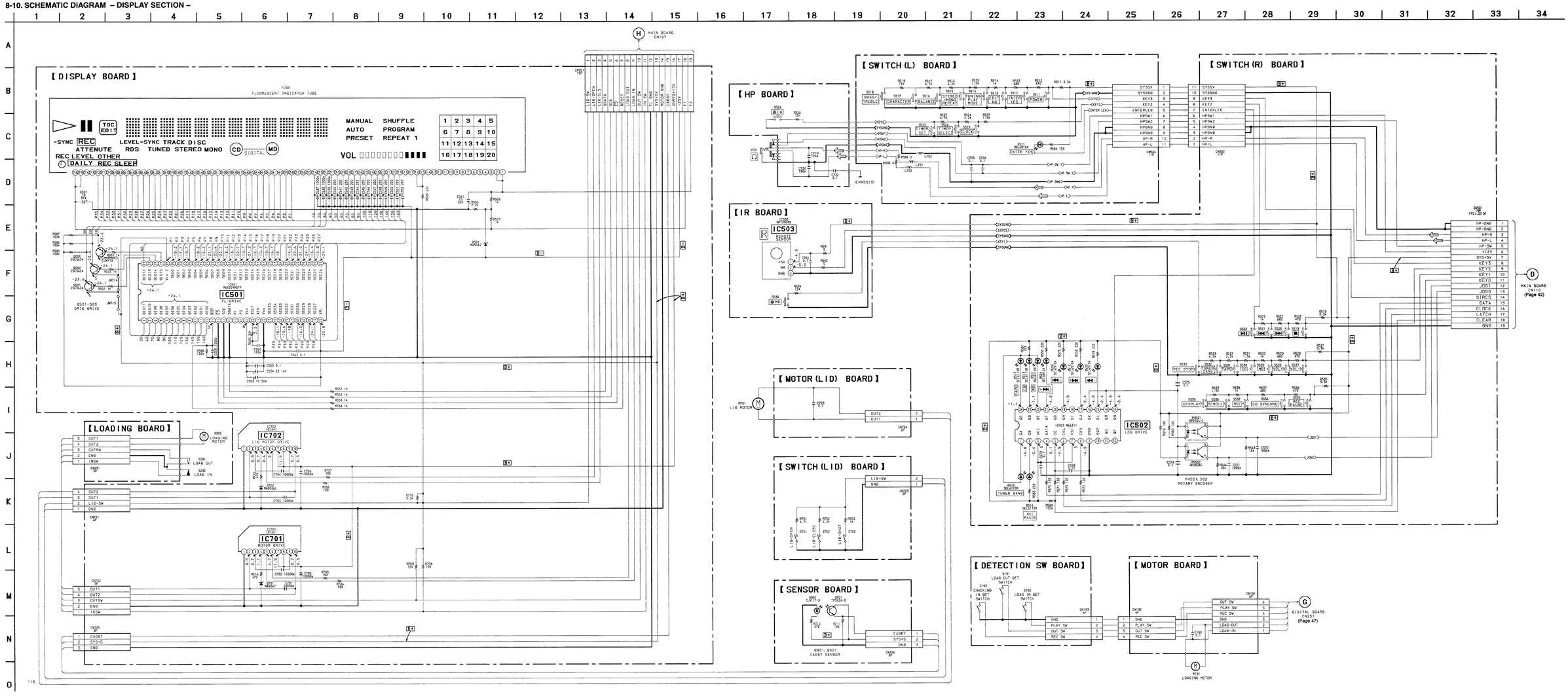

8-11. PRINTED WIRING BOARDS – DISPLAY SECTION –

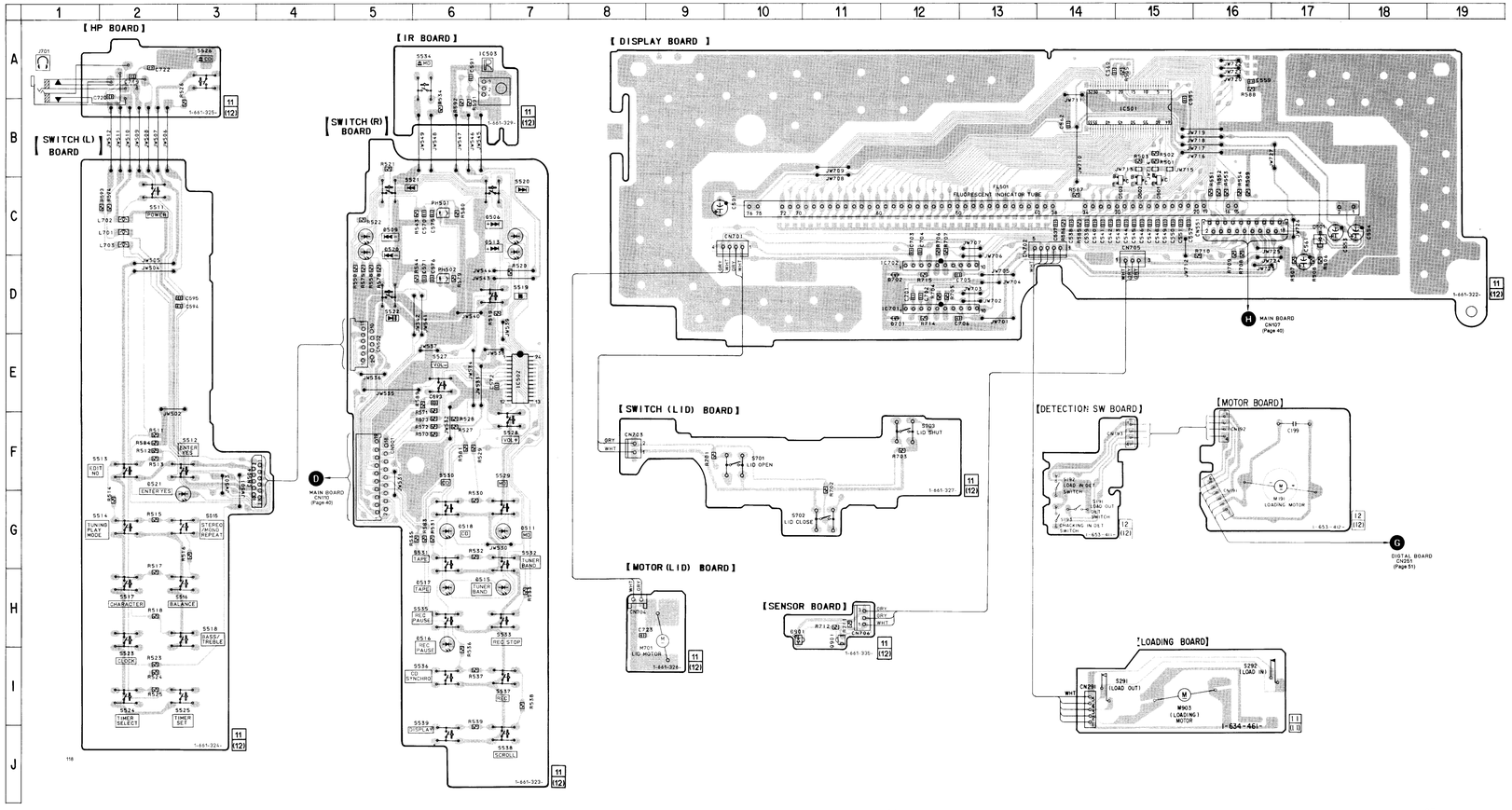

• SEMICONDUCTOR LOCATION

Ref. No.	Location
D501	C-17
D506	C-7
D509	C-5
D511	G-7
D513	C-7
D515	H-7
D516	H-6
D517	H-6
D518	G-6
D520	C-5
D521	G-3
D701	D-12
D702	D-12
D901	H-10
IC501	A-15
IC502	E-7
IC503	A-7
IC701	D-12
IC702	D-12
PH501	C-6
PH502	D-6
Q501	B-15
Q502	B-15
Q503	B-15
Q901	H-11

Note:

- ○— : parts extracted from the component side.
- —— : parts extracted from the conductor side.
- ▒ : Pattern from the side which enables seeing. (The other layers' patterns are not indicated)

• Abbreviation

CND : Canadian
G : German
IT : Italian
SP : Singapore
HK : Hong Kong

• WAVEFORMS – BD : MD SECTION –

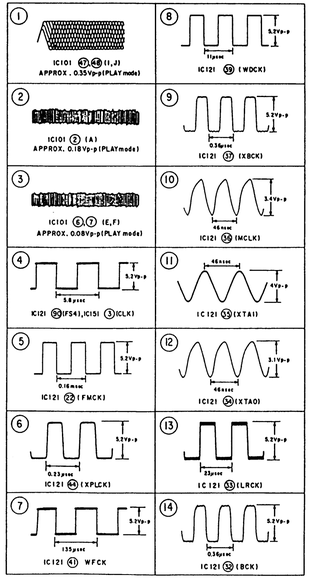

● WAVEFORMS – BD : CD SECTION –

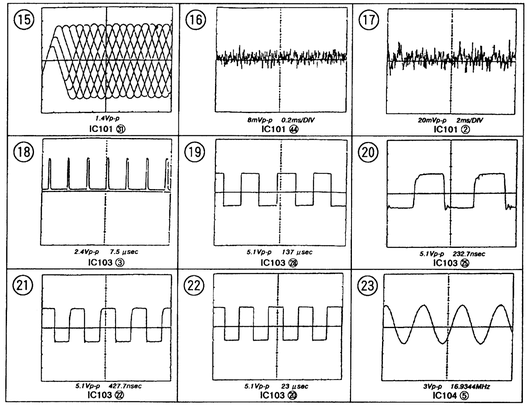

Note :

- All capacitors are in µF unless otherwise noted. pF: µµF 50WV or less are not indicated except for electrolytics and tantalums.
- All resistors are in Ω and ¼W or less unless otherwise specified.

Note :	Note :
The components identified by mark ⚠ or dotted line with mark ⚠are critical for safety. Replace only with part number specified.	Les composants identifiés par une marque ⚠sont critiques pour la sécurité. Ne les remplacer que par une pièce portant le numéro spécifié.

- [B+] : B+ Line
- [▭] : adjustment for repair.
- Voltage and waveforms are dc with respect to ground under no-signal conditions.
  no mark : PB (CD)
- Voltages are taken with a VOM (Input impedance 10MΩ). Voltage variations may be noted due to normal production tolerances.
- Waveforms are taken with a oscilloscope. Voltage variations may be noted due to normal production tolerances.
- Circled numbers refer to waveforms.
- Signal path.
  ▨▨ : REC (DIGITAL IN) ▨▨ : CD

8-12. SCHEMATIC DIAGRAM – BD : CD SECTION –

● Refer to page 77 for IC Block Diagrams.

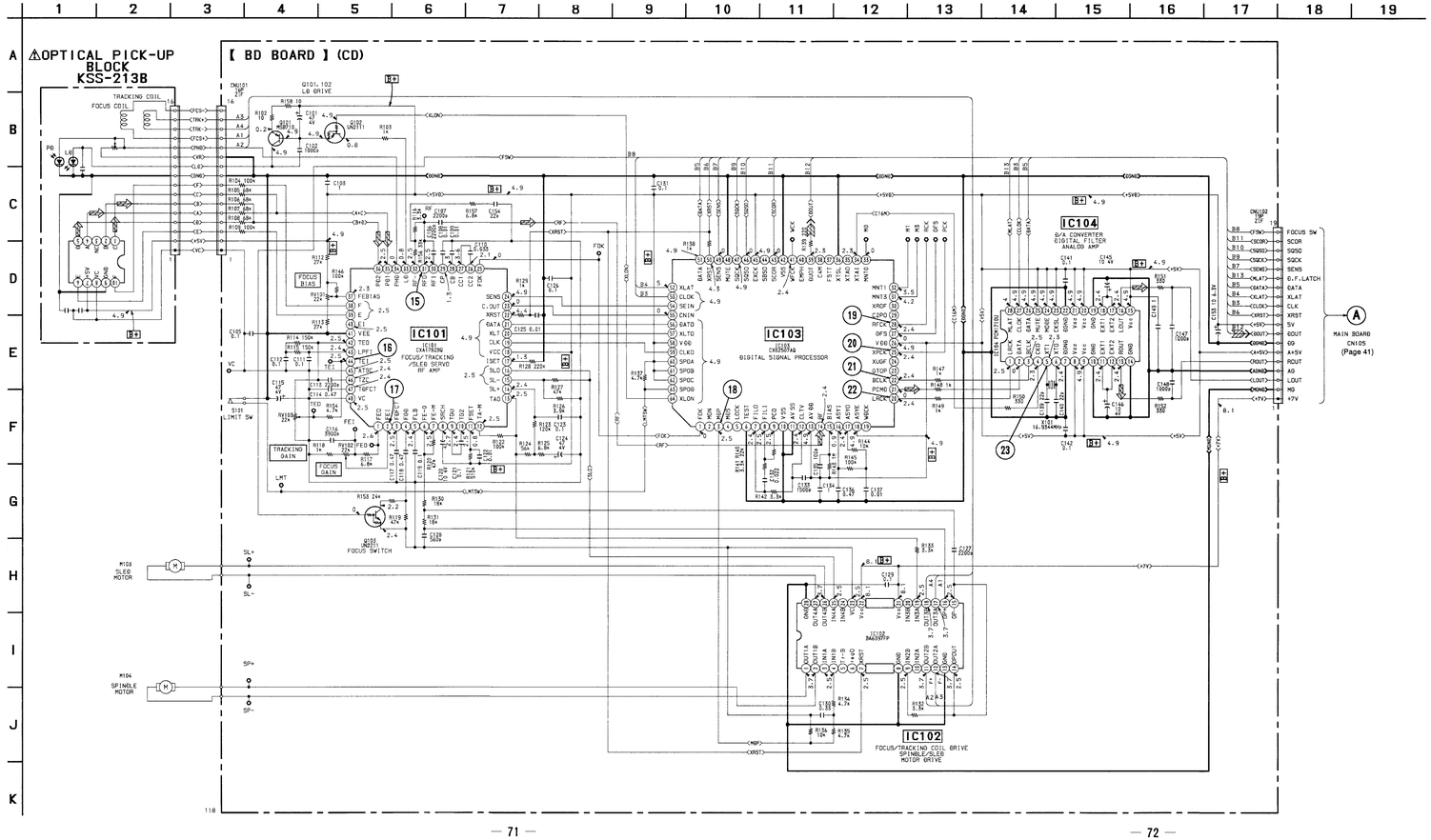

8-13. PRINTED WIRING BOARDS – BD : CD SECTION –

● **SEMICONDUCTOR LOCATION**

Ref. No.	Location
IC101	H-3
IC102	H-4
IC103	B-3
IC104	J-2
Q101	E-3
Q102	G-3
Q103	E-2

Note:

- ○— : parts extracted from the component side.
- —— : parts extracted from the conductor side.
- ⊕ : Through hole.
- ▒ : Pattern from the side which enables seeing. (The other layers' patterns are not indicated)

8-14. IC BLOCK DIAGRAM

– MAIN SECTION –

IC101 CXA1946AQ

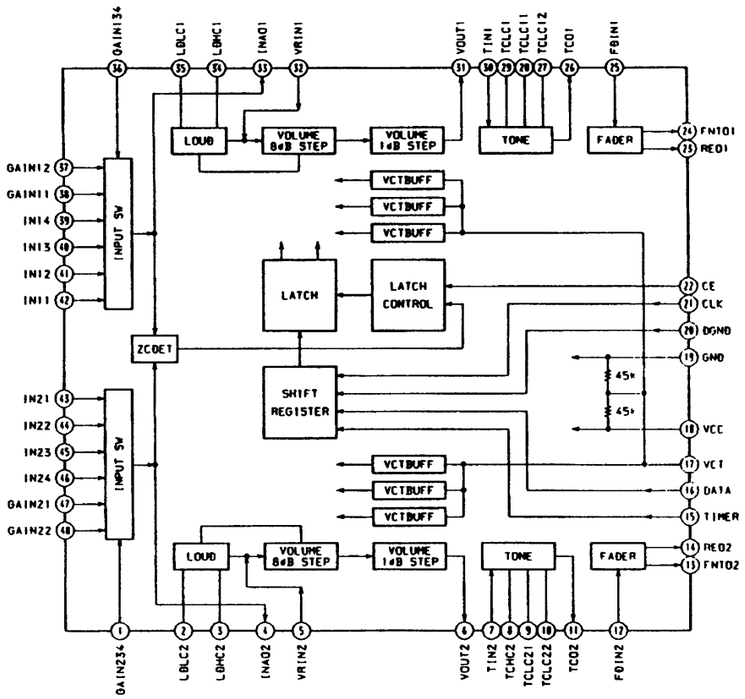

IC821, 831 BA3960

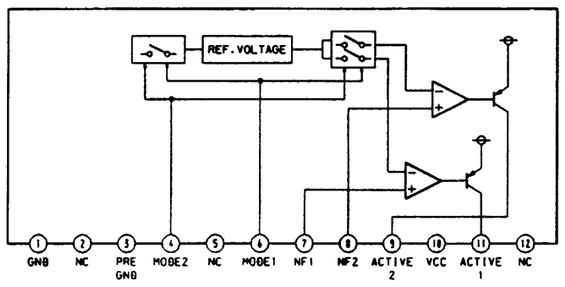

IC851 M62005L

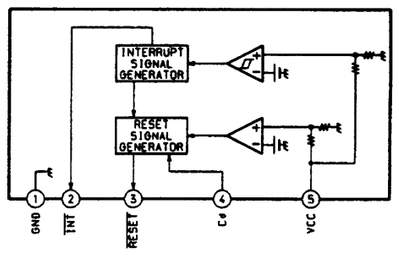

IC151 MPC17A38VMEL

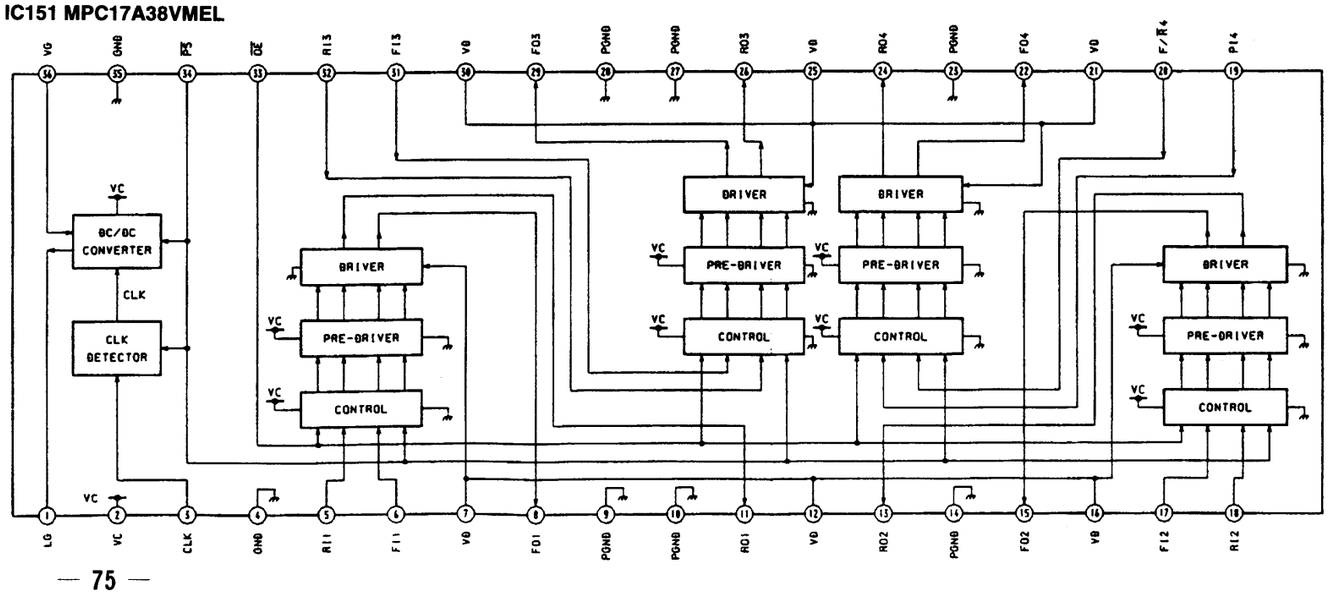

– MD SECTION –

IC121 CXD2535BR

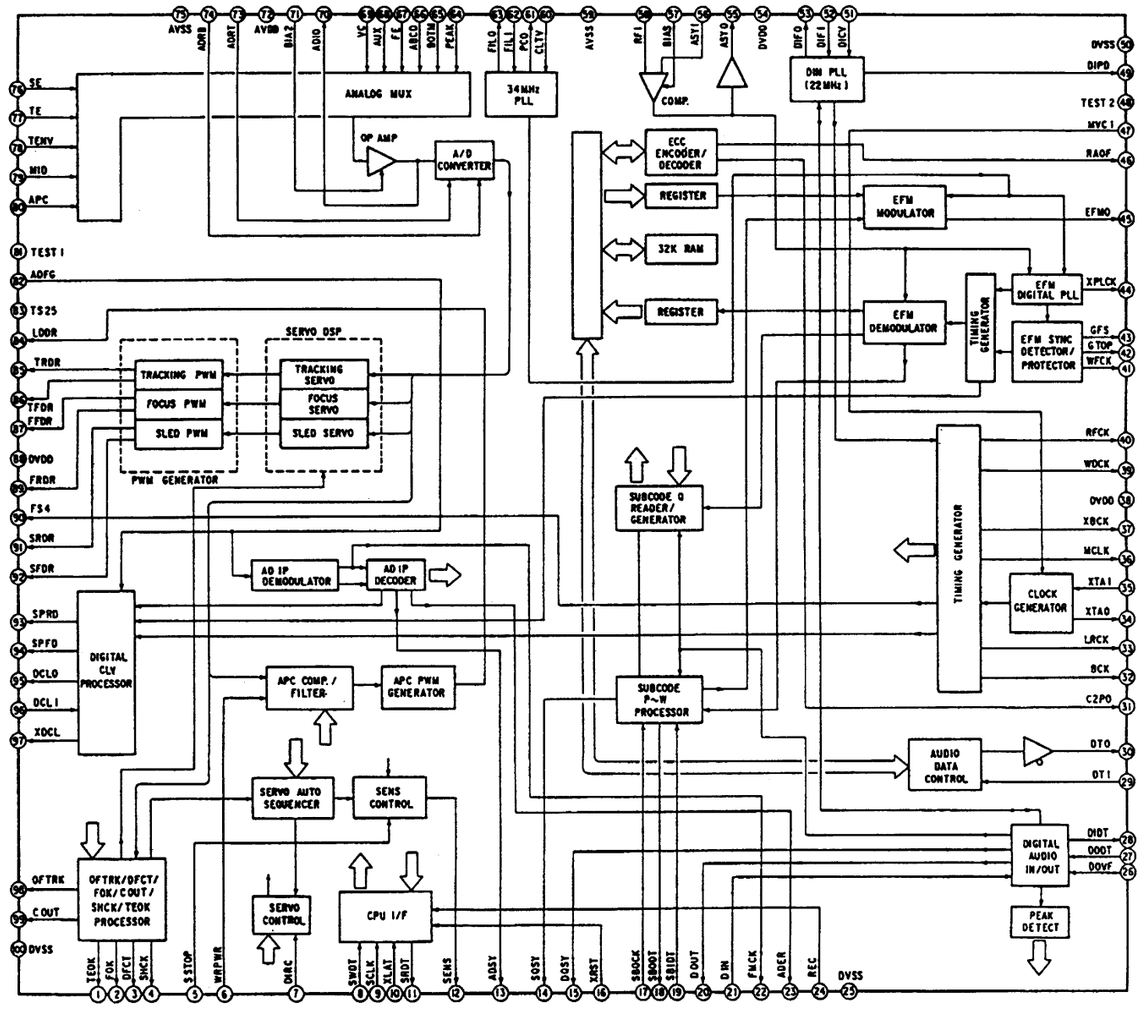

IC171 X24C01S

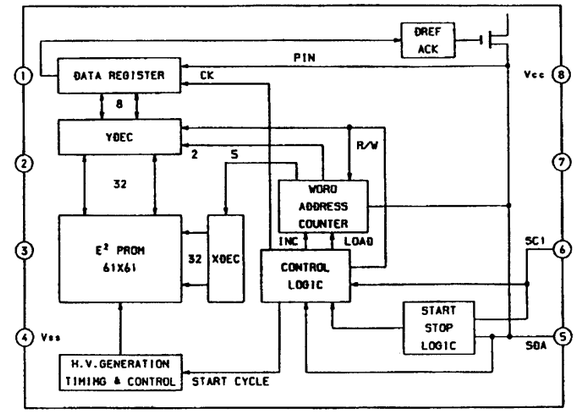

– CD SECTION –

IC101 CXA1782BQ

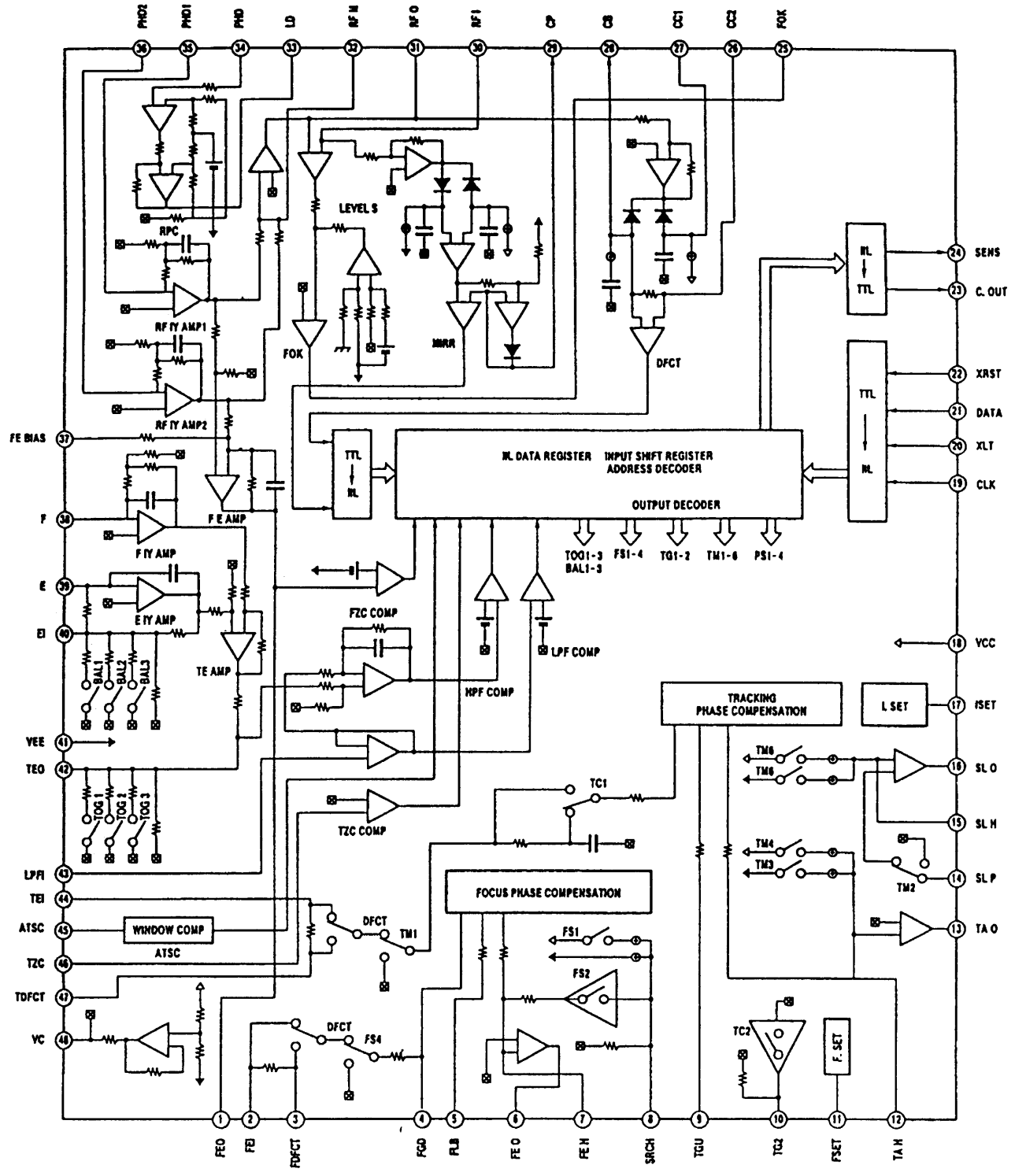

IC102 BA6397FP

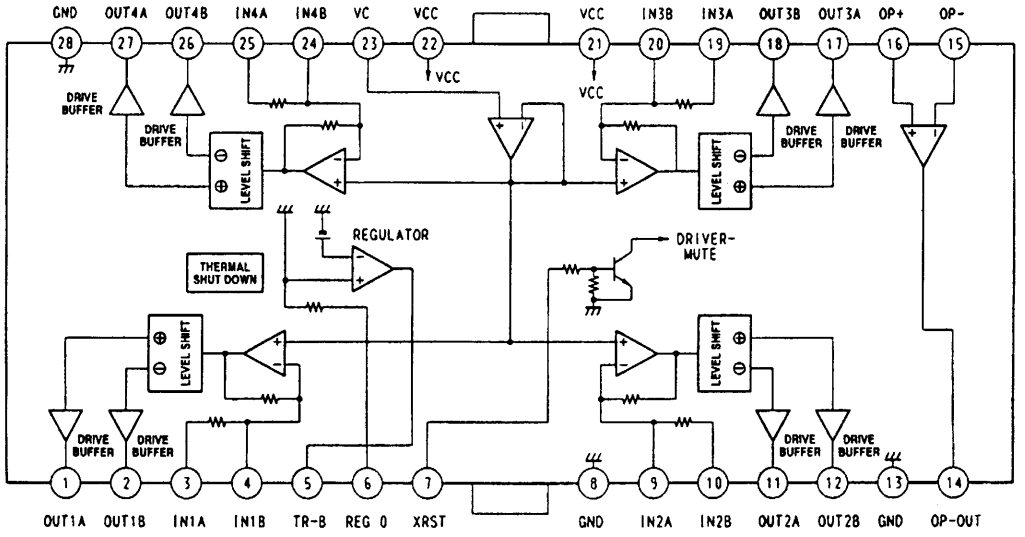

IC103 CXD2507AQ

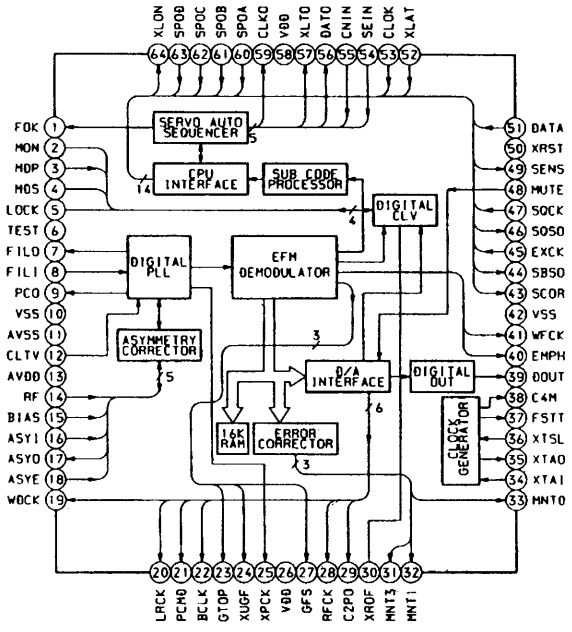

IC104 PCM1710U-B

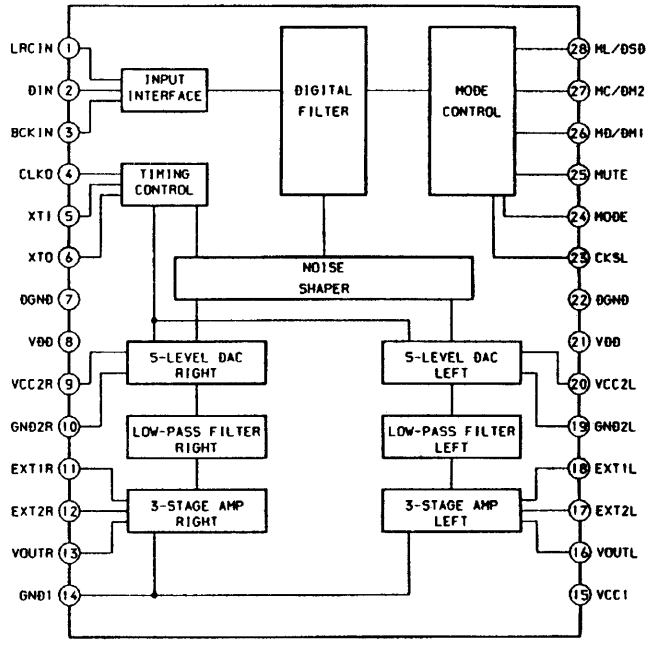

SECTION 9
EXPLODED VIEWS

NOTE :
- -XX, -X mean standardized parts, so they may have some difference from the original one.
- Items marked " * "are not stocked since they are seldom required for routine service. Some delay should be anticipated when ordering these items.
- The mechanical parts with no reference number in the exploded views are not supplied.
- Hardware (# mark) list and accessories and packing materials are given in the last of this parts list.
- Abbreviation

CND	: Canadian	SP	: Singapore
HK	: Hong Kong	G	: German
IT	: Italian		

The components identified by mark ⚠ or dotted line with mark ⚠ are critical for safety.
Replace only with part number specified.

Les composants identifiés par une marque ⚠sont critiques pour la sécurité. Ne les remplacer que par une pièce portant le numéro spécifié.

9-1. CABINET SECTION

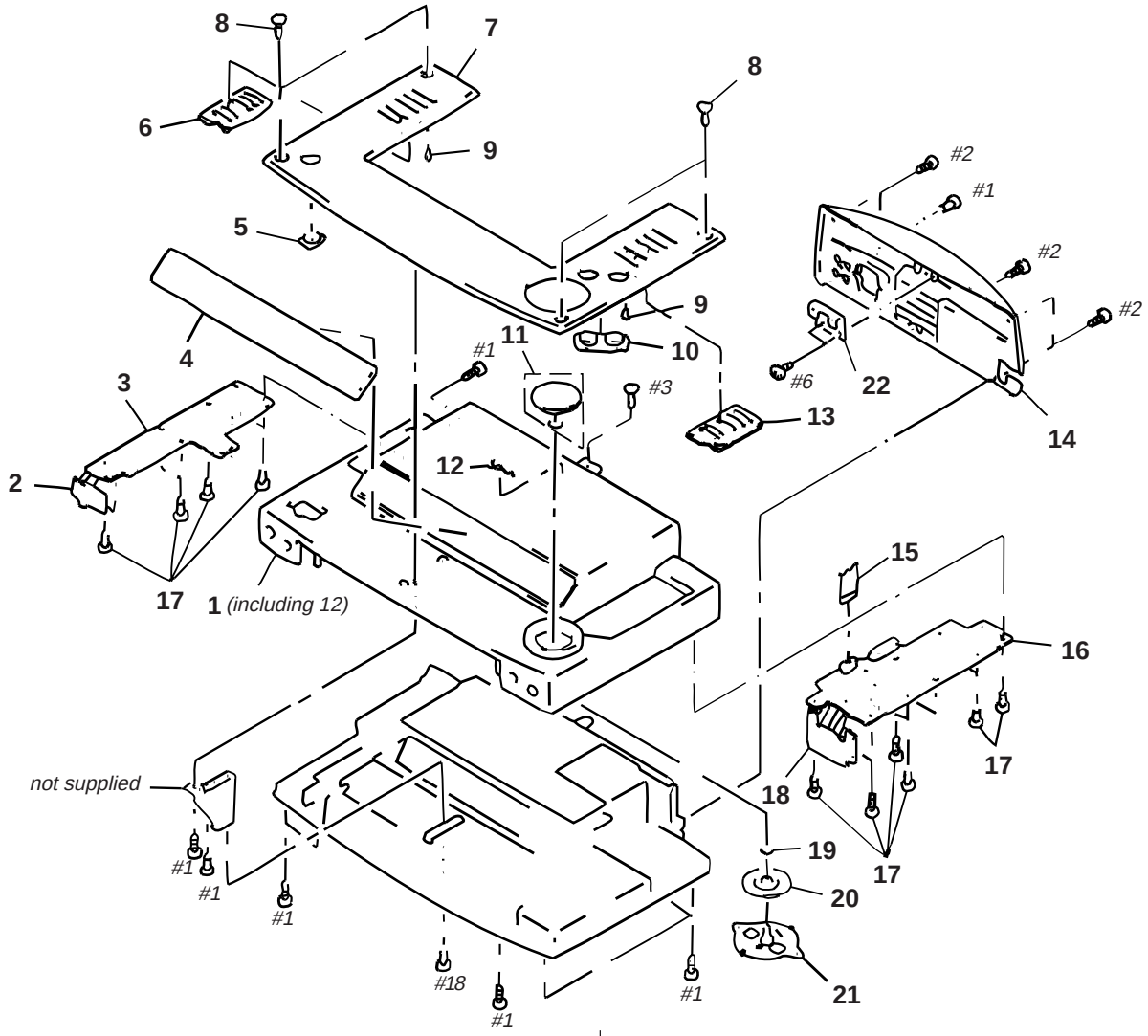

Ref. No.	Part No.	Description	Remark
1	X-4947-203-1	CASE (TOP) ASSY (US,CND)	
1	X-4947-204-1	CASE (TOP) ASSY (AEP,UK,G,IT)	
* 1	X-4947-205-1	CASE (TOP) ASSY (HK,SP)	
* 2	1-661-325-11	HP BOARD	
* 3	1-661-324-11	SWITCH (L) BOARD	
4	4-980-513-01	PLATE, INDICATION	
5	X-4947-046-1	BUTTON (POWER) ASSY	
6	X-4947-044-1	BUTTON (MODE) ASSY	
7	4-980-512-01	PLATE, ORNAMENTAL	
8	4-982-457-01	SCREW, HEXAGON HOLE TAPPING	
9	4-980-519-01	INDICATOR (FUN)	
10	X-4947-047-1	BUTTON (VOL) ASSY	

Ref. No.	Part No.	Description	Remark
11	X-4947-291-1	KNOB (JOG) ASSY	
12	4-942-567-01	EMBLEM (NO.4), SONY	
13	X-4947-045-1	BUTTON (BAND) ASSY	
* 14	4-980-506-01	PLATE (T BACK), ORNAMENTAL	
15	1-777-137-11	WIRE (FLAT TYPE) (11CORE)	
* 16	1-661-323-11	SWITCH (R) BOARD	
17	4-951-620-01	SCREW (2.6X8), +BVTP	
* 18	1-661-329-11	IR BOARD	
19	4-981-608-11	WASHER, SLIT	
20	X-4946-857-1	ROTOR ASSY	
21	X-4946-856-1	PLATE (JOG) ASSY	
22	4-983-312-01	BRACKET (T BACK)	

9-2. CHASSIS SECTION-1

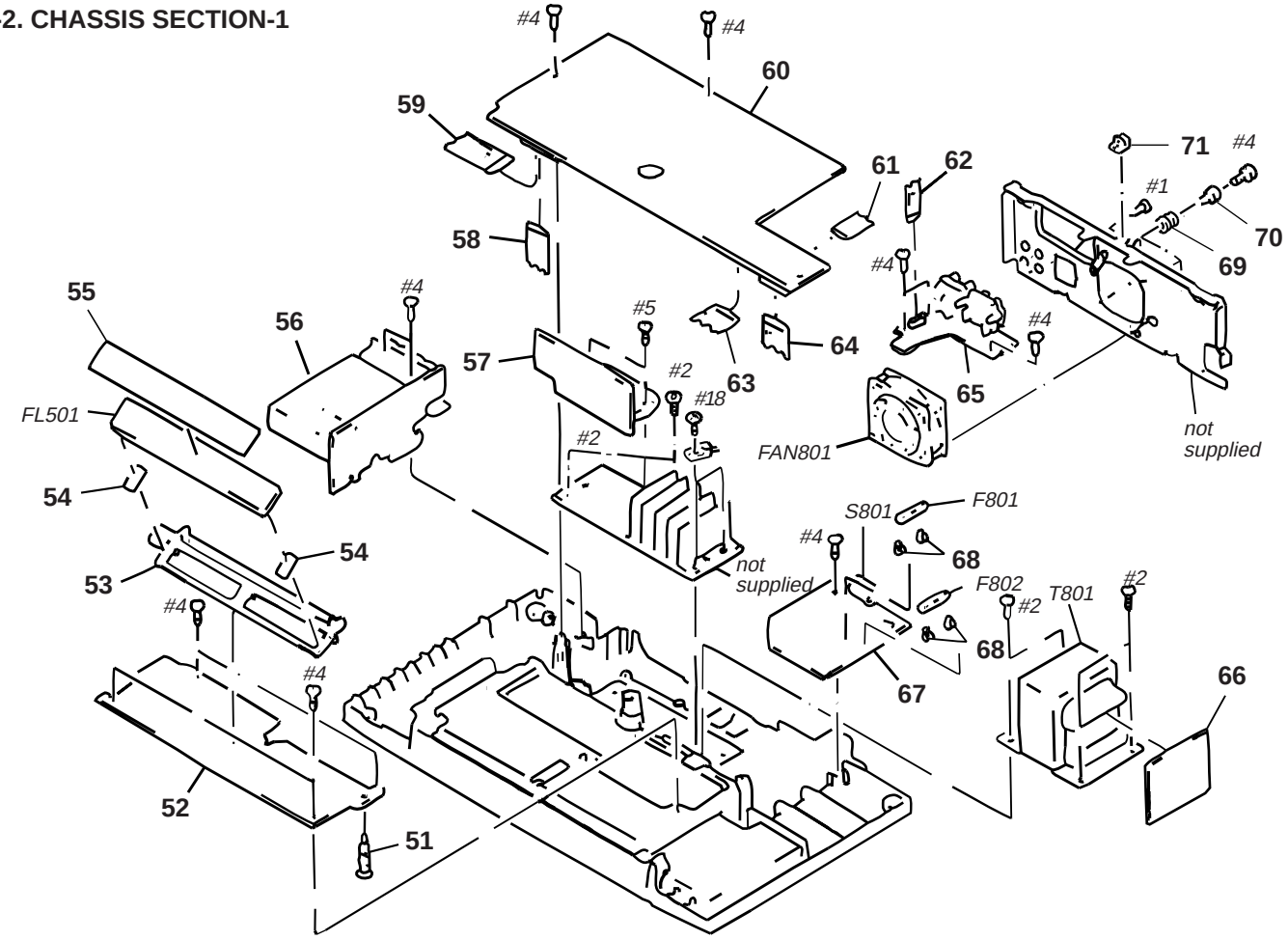

Ref. No.	Part No.	Description	Remark
* 51	4-982-455-01	HOLDER, PC BOARD	
* 52	1-661-322-11	DISPLAY BOARD	
* 53	4-980-523-01	HOLDER (FL)	
* 54	4-955-901-01	CUSHION (FL)	
* 55	4-980-522-01	FILTER	
* 56	1-661-333-11	TUNER BOARD	
* 57	A-4390-522-A	AMP BOARD, COMPLETE (US)	
* 57	A-4390-538-A	AMP BOARD, COMPLETE (AEP,G,IT)	
* 57	A-4390-554-A	AMP BOARD, COMPLETE (HK,SP)	
* 57	A-4390-719-A	AMP BOARD, COMPLETE (CND)	
* 57	A-4390-735-A	AMP BOARD, COMPLETE (UK)	
58	1-777-033-11	WIRE (FLAT TYPE) (19 CORE)	
59	1-773-004-11	WIRE (FLAT TYPE) (15 CORE)	
* 60	A-4390-518-A	MAIN BOARD, COMPLETE (US)	
* 60	A-4390-534-A	MAIN BOARD, COMPLETE (AEP,G,IT)	
* 60	A-4390-550-A	MAIN BOARD, COMPLETE (HK,SP)	
* 60	A-4390-715-A	MAIN BOARD, COMPLETE (CND)	
* 60	A-4390-731-A	MAIN BOARD, COMPLETE (UK)	
61	1-777-291-11	WIRE (FLAT TYPE) (21 CORE)	
62	1-769-974-11	WIRE (FLAT TYPE) (13 CORE)	

Ref. No.	Part No.	Description	Remark
63	1-773-106-11	WIRE (FLAT TYPE) (19 CORE)	
64	1-773-117-11	WIRE (FLAT TYPE) (19 CORE)	
* 65	1-661-328-11	TERMINAL BOARD	
* 66	1-661-332-11	TRANSFORMER BOARD	
* 67	1-661-331-11	AC BOARD	
68	1-533-293-11	FUSE HOLDER	
* 69	4-888-798-11	BUSHING, RUBBER	
* 70	4-983-696-01	COLLAR	
* 71	4-617-314-01	CLAMP	
⚠ F801	1-533-296-11	FUSE,GLASS CYLINDRICAL (2A 125V)(US,CND)	
⚠ F801	1-532-259-00	FUSE, TIME LAG (T1.6AL 250V)(SP,HK)	
⚠ F802	1-532-215-00	FUSE, TIME LAG (T0.8AL 250V) (AEP,UK,G,IT,SP,HK)	
FAN801	1-698-651-11	FAN, D.C.	
FL501	1-517-520-11	INDICATOR TUBE, FLUORESCENT	
⚠ S801	1-572-675-11	SWITCH, POWER VOLTAGE CHANGE	
⚠ T801	1-429-661-11	TRANSFORMER, POWER (AEP,UK,G,IT)	
⚠ T801	1-429-662-11	TRANSFORMER, POWER (SP,HK)	
⚠ T801	1-429-663-11	TRANSFORMER, POWER (US,CND)	

The components identified by mark ⚠ or dotted line with mark ⚠ are critical for safety. Replace only with part number specified.	Les composants identifiés par une marque ⚠sont critiques pour la sécurité. Ne les remplacer que par une pièce portant le numéro spécifié.

9-3. CHASSIS SECTION-2

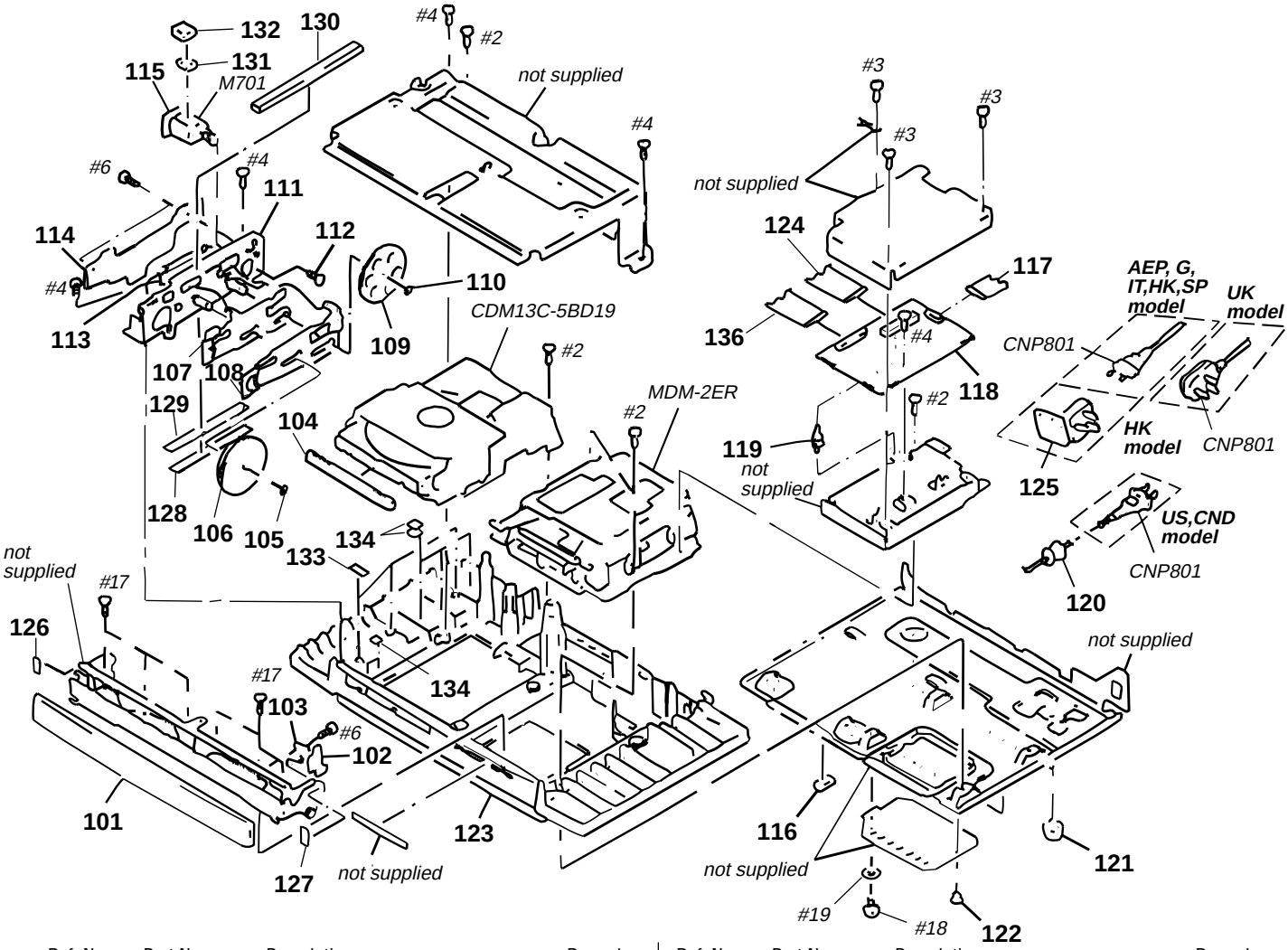

Ref. No.	Part No.	Description	Remark
101	X-4946-828-1	LID ASSY	
* 102	1-661-335-11	SENSOR BOARD	
* 103	4-980-529-01	HOLDER (SENSOR)	
104	4-980-520-01	PANEL, CD	
105	4-981-608-11	WASHER, SLIT	
106	4-980-496-01	GEAR (CAM)	
* 107	4-980-492-01	PLATE (CL)	
* 108	X-4946-826-1	CHASSIS (LD) ASSY	
109	4-980-495-01	GEAR (C)	
110	4-981-608-01	WASHER, SLIT	
* 111	X-4946-830-1	PLATE (OP) ASSY	
112	4-965-659-01	SCREW (+B 2X2.2)	
113	4-982-456-01	SPRING, TENSION	
* 114	1-661-327-11	SWITCH (LID) BOARD	
* 115	1-661-326-11	MOTOR (LID) BOARD	
116	4-984-379-01	CUSHION (FOOT)	
117	1-777-291-11	WIRE (FLAT TYPE) (21 CORE)	
* 118	A-4390-532-A	DIGITAL BOARD, COMPLETE (US)	
* 118	A-4390-548-A	DIGITAL BOARD, COMPLETE (AEP,G,IT)	
* 118	A-4390-564-A	DIGITAL BOARD, COMPLETE (HK,SP)	
* 118	A-4390-729-A	DIGITAL BOARD, COMPLETE (CND)	
* 118	A-4390-745-A	DIGITAL BOARD, COMPLETE (UK)	
119	4-924-098-21	HOLDER, PC BOARD	
* 120	3-703-244-00	BUSHING (2104), CORD	
121	4-981-393-01	FOOT	
122	3-531-576-11	RIVET	
* 123	4-980-505-01	CASE (BOTTOM)	
124	1-769-118-11	WIRE (FLAT TYPE) (30 CORE)	

Ref. No.	Part No.	Description	Remark
⚠125	1-770-019-11	ADAPTOR, CONVERSION PLUG 3P(HK)	
* 126	4-983-700-01	CUSHION (L)	
127	4-949-303-41	SPACER	
* 128	4-983-697-01	PLATE (LD)	
* 129	4-983-708-01	RUBBER (C)	
* 130	4-983-703-01	CUSHION (T)	
* 131	4-983-705-01	RUBBER	
* 132	4-983-702-11	CUSHION (M)	
* 133	4-983-701-01	CUSHION (B)	
* 134	4-983-707-01	RUBBER (B)	
136	1-769-119-11	WIRE (FLAT TYPE) (18 CORE)	
⚠CNP801	1-575-651-31	CORD, POWER (AEP,G,IT,SP,HK)	
⚠CNP801	1-775-789-11	CORD, POWER (US,CND)	
⚠CNP801	1-696-570-21	CORD, POWER (UK)	
M701	X-4947-281-1	LID MOTOR,ASSY	
#2	7-685-873-09	SCREW +BVTT 3X10 (S)	
#3	7-685-871-01	SCREW +BVTT 3X6 (S)	
#4	7-685-646-79	SCREW +BVTP 3X8 TYPE2 N-S	
#6	7-685-132-19	SCREW +BTP 2.6X5 TYPE2 N-S	
#17	7-685-546-19	SCREW +BTP 3X8 TYPE2 N-S	
#18	7-685-874-09	SCREW +BVTT 3X12 (S)	
#19	7-623-422-07	LW3, TYPE B	

The components identified by mark ⚠ or dotted line with mark ⚠ are critical for safety. Replace only with part number specified.	Les composants identifiés par une marque ⚠sont critiques pour la sécurité. Ne les remplacer que par une pièce portant le numéro spécifié.

9-4. MD MECHANISM SECTION (MDM-2ER)

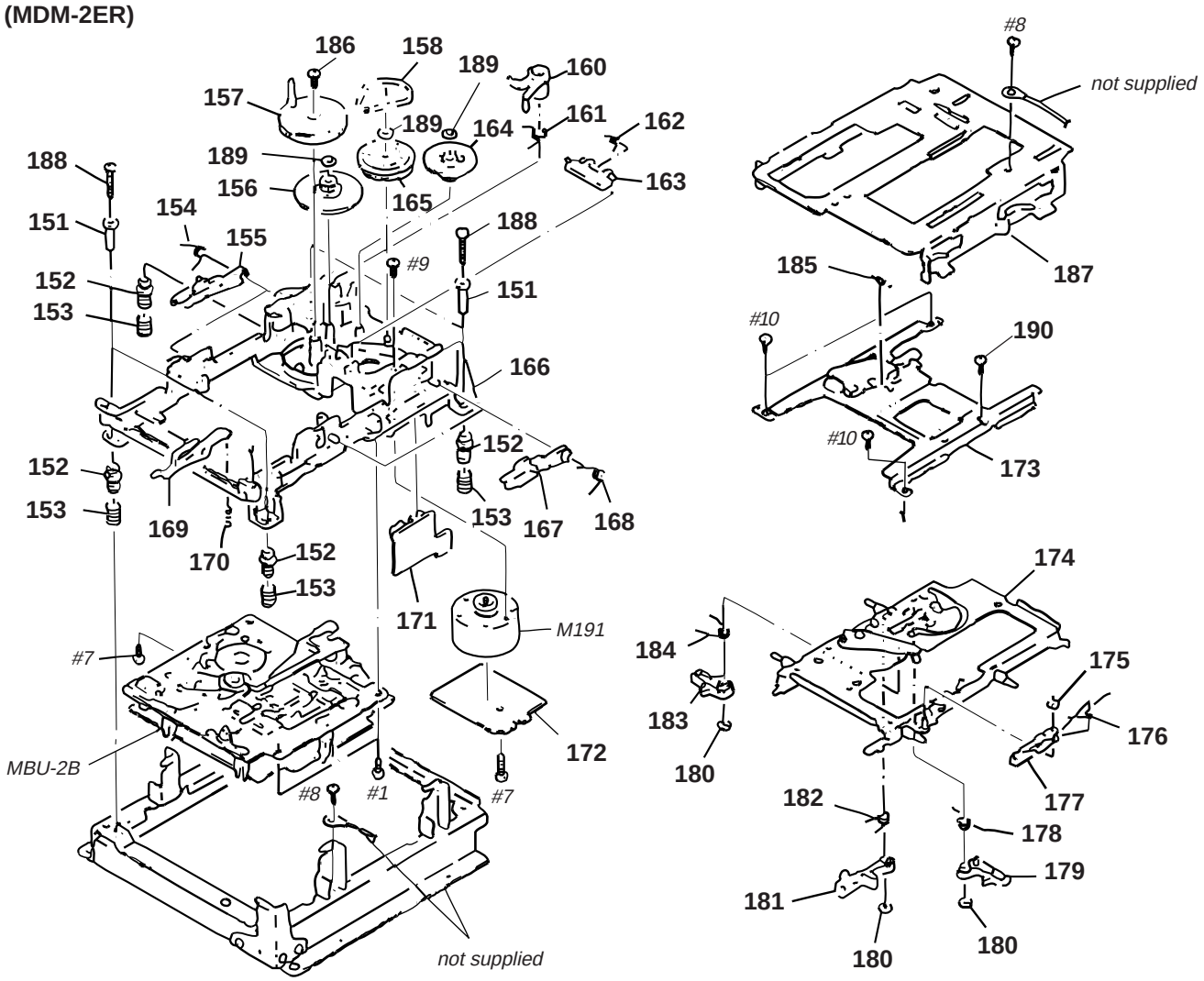

Ref. No.	Part No.	Description	Remark
151	4-983-100-01	COLLAR (DAMPER)	
152	4-967-671-01	INSULATOR (MD)	
153	4-967-673-01	SPRING, COMPRESSION	
154	4-967-668-01	SPRING (UDL), TORSION	
155	4-967-667-01	LEVER (UDL)	
156	4-977-610-01	GEAR (BD-B)	
157	X-4945-069-1	CAM ASSY	
158	4-967-656-01	BELT (BD)	
160	4-967-637-01	LEVER (SLM)	
161	4-984-426-01	SPRING (SLM), TORSION	
162	4-968-273-01	SPRING (OWH), TORSION	
163	4-968-272-01	LEVER (OWH)	
164	4-977-609-01	GEAR (BD-A)	
165	4-957-794-01	PULLEY (GEAR 1)	
* 166	X-4945-068-1	BASE (BD) ASSY	
167	4-967-669-01	LEVER (UDR)	
168	4-967-670-01	SPRING (UDR), TORSION	
169	4-979-400-01	LEVER (DOOR)	
170	4-970-710-01	SPRING, COMPRESSION	
* 171	1-653-411-11	DETECTION SW BOARD	

Ref. No.	Part No.	Description	Remark
* 172	1-653-412-11	MOTOR BOARD	
173	A-4672-087-A	BRACKET (LVO) ASSY	
174	X-4947-136-2	HOLDER ASSY	
175	4-968-919-11	WASHER, STOPPER	
176	4-967-646-01	SPRING (SHT), TORSION	
177	4-967-645-01	LEVER (SHT)	
178	4-983-106-02	SPRING (LM), TORSION	
179	4-967-639-01	LEVER (LM)	
180	4-968-919-01	WASHER, STOPPER	
181	4-967-641-01	LEVER (L)	
182	4-967-642-01	SPRING (L), TORSION	
183	4-982-040-01	LEVER (LOCK)	
184	4-982-099-01	SPRING (LOCK), TORSION	
185	4-971-743-02	SPRING, TENSION	
186	4-933-134-01	SCREW (+PTPWH M2.6X6)	
* 187	X-4945-872-1	SLIDER (M) ASSY	
188	4-972-910-01	SCREW (2.6X18), +B	
189	7-621-770-67	SCREW +PWH 2.6X6	
190	7-621-255-25	SCREW +PTT 2X4 (S)	
M191	A-4660-646-A	MOTOR (LOADING) ASSY	

9-5. BASE UNIT SECTION (MD) (MBU-2)

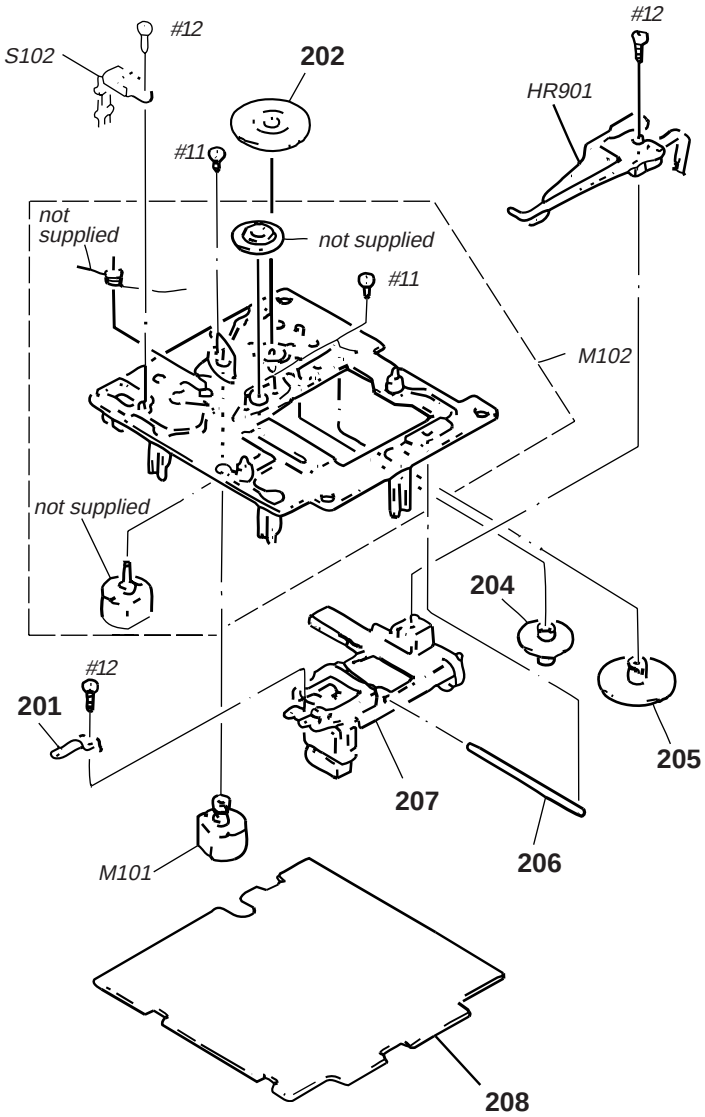

Ref. No.	Part No.	Description	Remark
* 201	1-634-461-11	LOADING BOARD	
202	4-967-675-01	GEAR (SL-A)	
204	4-967-676-01	GEAR (SL-B)	
205	4-967-677-01	GEAR (SL-C)	
206	4-967-678-01	SHAFT (OP)	
⚠207	8-583-009-11	OPTICAL PICK-UP KMS-210A/J-N (MD)	

Ref. No.	Part No.	Description	Remark
* 208	A-4673-809-A	BD(MD)BOARD, COMPLETE	
HR901	1-500-304-21	HEAD, OVER LIGHT (RF322-74A)	
M101	A-4660-651-A	MOTOR (SLED) ASSY	
M102	A-4660-650-A	CHASSIS ASSY, BU	
S102	1-762-148-11	SWITCH, PUSH (2 KEY) (PROTECT/REFLECT SWITCH)	

The components identified by mark ⚠ or dotted line with mark ⚠ are critical for safety. Replace only with part number specified.	Les composants identifiés par une marque ⚠sont critiques pour la sécurité. Ne les remplacer que par une pièce portant le numéro spécifié.

9-6. CD MECHANISM SECTION-1 (CDM-5BD19)

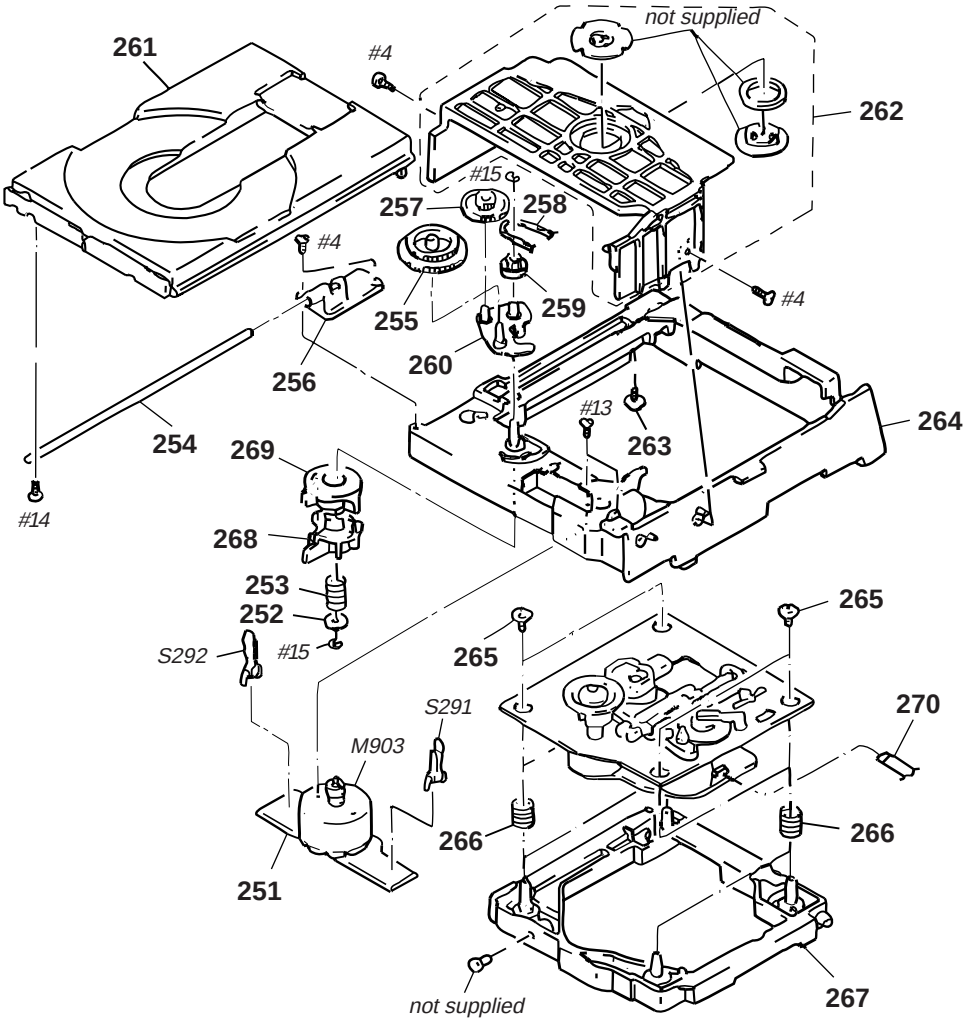

Ref. No.	Part No.	Description	Remark
251	4-967-679-01	SPRING (OP), LEAF	
252	4-927-654-01	WASHER (LIMITER)	
253	3-659-338-00	SPRING, COMPRESSION	
254	4-929-764-01	SHAFT (TABLE GUIDE)	
255	4-927-620-01	GEAR (P)	
256	4-944-006-11	BEARING	
257	4-927-628-01	GEAR (C)	
258	4-927-649-01	BELT	
259	4-929-724-01	PULLEY (B)	
260	X-4947-265-1	ARM ASSY, SWING	
261	4-944-012-01	TABLE, DISC	
262	A-4604-752-A	HOLDER (MG) ASSY	

Ref. No.	Part No.	Description	Remark
* 263	4-917-583-21	BRACKET, YOKE	
* 264	X-4946-208-2	CHASSIS (MD) ASSY	
265	4-933-134-01	SCREW (+PTPWH M2.6X6)	
266	4-958-593-01	SPRING (BU), COMPRESSION	
267	4-929-747-01	HOLDER (BU)	
268	4-929-727-01	CAM (A)	
269	4-929-729-01	CAM (B)	
270	1-777-033-11	WIRE (FLAT TYPE) (19 CORE)	
M903	A-4608-362-A	MOTOR (L)ASSY (LOADING)	
S291	1-571-924-11	SWITCH, LEAF (LOAD OUT)	
S292	1-571-924-11	SWITCH, LEAF (LOAD IN)	

9-7. CD MECHANISM SECTION-2 (CDM-5BD19)

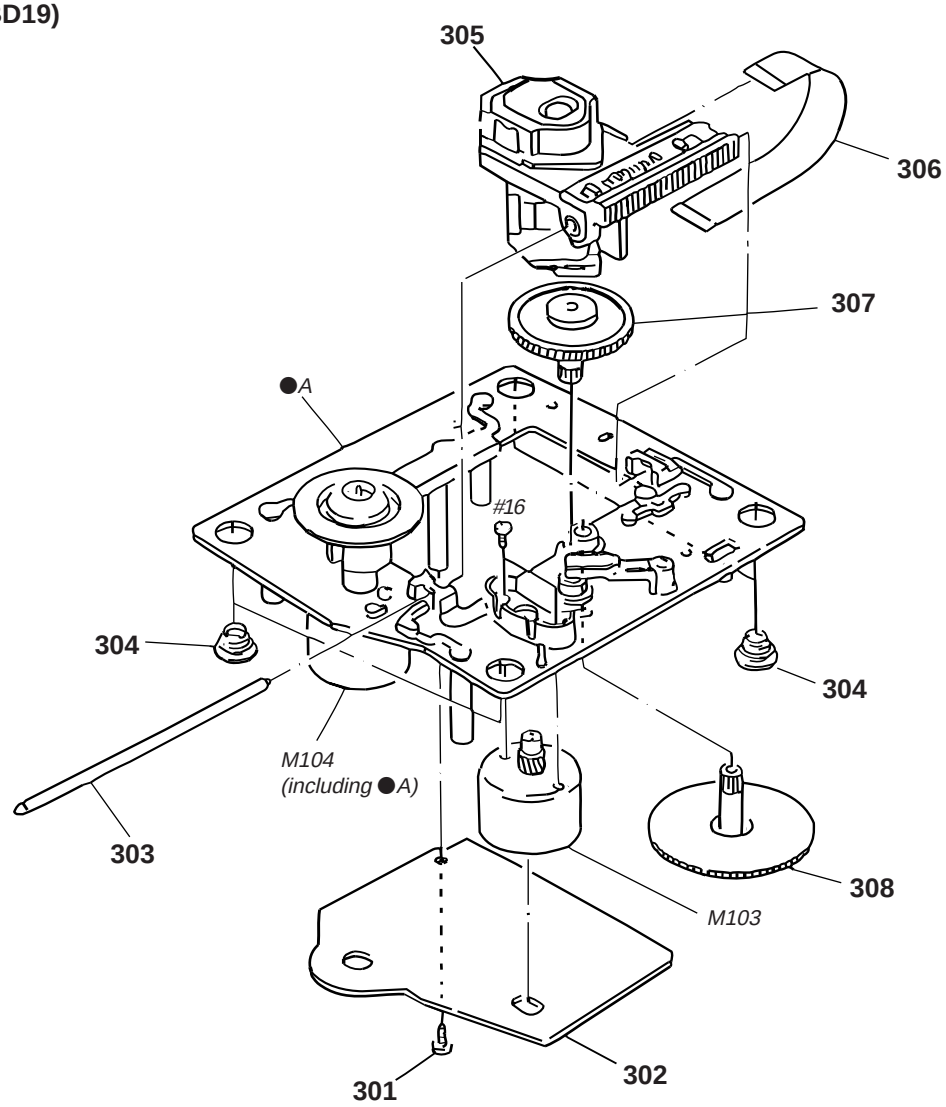

Ref. No.	Part No.	Description	Remark
301	4-951-620-01	SCREW (2.6X8), +BVTP	
* 302	A-4673-402-A	BD (CD) BOARD, COMPLETE	
303	4-917-565-01	SHAFT, SLED	
304	4-951-940-01	INSULATOR (BU)	
⚠305	8-848-367-11	OPTICAL PICK-UP KSS-213B/K-N (CD)	
306	1-769-069-11	WIRE (FLAT TYPE) (16 CORE)	
307	4-917-567-01	GEAR (M)	
308	4-917-564-01	GEAR (P), FLATNESS	
M103	X-4917-504-1	MOTOR, ASSY(CD)(SLED MOTOR)	
M104	X-4917-523-4	MOTOR, ASSY(CD)(SPINDLE MOTOR)	

The components identified by mark ⚠ or dotted line with mark ⚠ are critical for safety. Replace only with part number specified.	Les composants identifiés par une marque ⚠sont critiques pour la sécurité. Ne les remplacer que par une pièce portant le numéro spécifié.

AC AMP

SECTION 10
ELECTRICAL PARTS LIST

NOTE :
- Due to standardization, replacements in the parts list may be different from the parts specified in the diagrams or the components used on the set.
- -XX, -X mean standardized parts, so they may have some difference from the original one.
- RESISTORS
  All resistors are in ohms
  METAL : Metal-film resistor
  METAL OXIDE :Metal oxide-film resistor
  F : nonflammable
- Items marked " * "are not stocked since they are seldom required for routine service. Some delay should be anticipated when ordering these items.
- SEMICONDUCTORS
  In each case, u : µ , for example :
  uA.... : µ A.... , uPA.... : µ PA....
  uPB.... : µ PB.... , uPC.... : µ PC....
  uPD.... : µ PD....
- CAPACITORS
  uF : µ F
- COILS
  uH : µ H
- Abbreviation
  CND : Canadian SP : Singapore
  HK : Hong Kong G : German
  IT : Italian

The components identified by mark ⚠ or dotted line with mark ⚠ are critical for safety.
Replace only with part number specified.

Les composants identifiés par une marque ⚠sont critiques pour la sécurité. Ne les remplacer que par une pièce portant le numéro spécifié.

When indicating parts by reference number, please include the board.

Ref. No.	Part No.	Description			Remark
*	1-661-331-11	AC BOARD			
		*********			
	1-533-293-11	FUSE HOLDER			
		< CAPACITOR >			
⚠C833	1-115-377-61	CERAMIC	3300PF	20%	250V
⚠C834	1-115-377-61	CERAMIC	3300PF	20%	250V
⚠C837	1-115-377-61	CERAMIC	3300PF	20%	250V
		< CONNECTOR >			
CN801	1-564-321-00	PIN, CONNECTOR 2P			
* CN802	1-564-687-11	PIN, CONNECTOR 3P			
		< FUSE >			
⚠F801	1-533-296-11	FUSE,GLASS CYLINDRICAL (2A 125V)(US,CND)			
⚠F801	1-532-259-00	FUSE, TIME LAG (T1.6AL 250V)(SP,HK)			
⚠F802	1-532-215-00	FUSE, TIME LAG (T0.8AL 250V) (AEP,UK,G,IT,SP,HK)			
		< LINE FILTER >			
⚠LF801	1-411-910-11	TRANSFORMER, LINE FILTER			
		< SWITCH >			
⚠S801	1-572-675-11	SWITCH, POWER VOLTAGE CHANGE (VOLTAGE SELECTOR)(SP,HK)			
**********					
*	A-4390-522-A	AMP BOARD, COMPLETE (US)			
*	A-4390-538-A	AMP BOARD, COMPLETE (AEP,G,IT)			
*	A-4390-554-A	AMP BOARD, COMPLETE (SP,HK)			
*	A-4390-719-A	AMP BOARD, COMPLETE (CND)			
*	A-4390-735-A	AMP BOARD, COMPLETE (UK)			
		**********			
		< CAPACITOR >			
C901	1-126-964-11	ELECT	10uF	20%	50V
C902	1-162-282-31	CERAMIC	100PF	10%	50V
C903	1-126-964-11	ELECT	10uF	20%	50V
C904	1-126-967-11	ELECT	47uF	20%	50V
C905	1-126-052-11	ELECT	100uF	20%	50V
C906	1-126-964-11	ELECT	10uF	20%	50V
C907	1-126-964-11	ELECT	10uF	20%	50V
C908	1-136-165-00	FILM	0.1uF	5%	50V
C909	1-136-165-00	FILM	0.1uF	5%	50V
C921	1-126-923-11	ELECT	220uF	20%	10V
C922	1-124-903-11	ELECT	1uF	20%	50V
C923	1-126-964-11	ELECT	10uF	20%	50V
C941	1-124-903-11	ELECT	1uF	20%	50V
C951	1-126-964-11	ELECT	10uF	20%	50V
C952	1-162-282-31	CERAMIC	100PF	10%	50V
C953	1-126-964-11	ELECT	10uF	20%	50V
C954	1-126-967-11	ELECT	47uF	20%	50V
C955	1-126-052-11	ELECT	100uF	20%	50V
C956	1-164-159-21	CERAMIC	0.1uF		50V
C957	1-126-964-11	ELECT	10uF		50V
C958	1-136-165-00	FILM	0.1uF	5%	50V
C959	1-136-165-00	FILM	0.1uF	5%	50V
		< CONNECTOR >			
CN901	1-564-511-11	PLUG, CONNECTOR 8P			
CN902	1-770-726-11	CONNECTOR, BOARD TO BOARD 6P			
		< DIODE >			
D901	8-719-987-63	DIODE 1N4148M			
D951	8-719-987-63	DIODE 1N4148M			
		< IC >			
IC901	8-749-900-96	IC STK-4142MK2			
		< TRANSISTOR >			
Q901	8-729-140-84	TRANSISTOR 2SC1841-PAFAEA			
Q921	8-729-620-05	TRANSISTOR 2SC2603-EF			

Ref. No.	Part No.	Description				Remark
Q922	8-729-620-05	TRANSISTOR	2SC2603-EF			
Q923	8-729-620-05	TRANSISTOR	2SC2603-EF			
Q924	8-729-119-76	TRANSISTOR	2SA1175-HFE			
Q925	8-729-620-05	TRANSISTOR	2SC2603-EF			
Q931	8-729-620-05	TRANSISTOR	2SC2603-EF			
Q932	8-729-422-73	TRANSISTOR	UN4212			
Q941	8-729-620-05	TRANSISTOR	2SC2603-EF			
Q951	8-729-140-84	TRANSISTOR	2SC1841-PAFAEA			
		< RESISTOR >				
R901	1-249-417-11	CARBON	1K	5%	1/4W	
R902	1-249-438-11	CARBON	56K	5%	1/4W	
R903	1-249-415-11	CARBON	680	5%	1/4W	
R904	1-249-438-11	CARBON	56K	5%	1/4W	
R905	1-260-103-11	CARBON	2.2K	5%	1/2W	
R906	1-260-103-11	CARBON	2.2K	5%	1/2W	
R907	1-260-099-11	CARBON	1K	5%	1/2W	
R908	1-260-099-11	CARBON	1K	5%	1/2W	
⚠R909	1-212-881-11	FUSIBLE	100	5%	1/4W	F
⚠R910	1-217-151-00	METAL PLATE	0.22			F
R911	1-249-417-11	CARBON	1K	5%	1/4W	
R912	1-249-431-11	CARBON	15K	5%	1/4W	
R913	1-249-441-11	CARBON	100K	5%	1/4W	
R914	1-260-076-11	CARBON	10	5%	1/2W	
R921	1-249-438-11	CARBON	56K	5%	1/4W	
R922	1-249-437-11	CARBON	47K	5%	1/4W	
R923	1-249-441-11	CARBON	100K	5%	1/4W	
R924	1-249-429-11	CARBON	10K	5%	1/4W	
R925	1-249-441-11	CARBON	100K	5%	1/4W	
R926	1-249-429-11	CARBON	10K	5%	1/4W	
R927	1-249-441-11	CARBON	100K	5%	1/4W	
R928	1-249-441-11	CARBON	100K	5%	1/4W	
R929	1-249-429-11	CARBON	10K	5%	1/4W	
R930	1-249-441-11	CARBON	100K	5%	1/4W	
R931	1-249-429-11	CARBON	10K	5%	1/4W	
R932	1-249-429-11	CARBON	10K	5%	1/4W	
R933	1-249-439-11	CARBON	68K	5%	1/4W	
R934	1-249-441-11	CARBON	100K	5%	1/4W	
R935	1-249-441-11	CARBON	100K	5%	1/4W	
R941	1-249-429-11	CARBON	10K	5%	1/4W	
R942	1-249-441-11	CARBON	100K	5%	1/4W	
R943	1-247-807-31	CARBON	100	5%	1/4W	
R944	1-249-437-11	CARBON	47K	5%	1/4W	
R945	1-249-437-11	CARBON	47K	5%	1/4W	
R946	1-249-441-11	CARBON	100K	5%	1/4W	
R947	1-249-429-11	CARBON	10K	5%	1/4W	
R951	1-249-417-11	CARBON	1K	5%	1/4W	
R952	1-249-438-11	CARBON	56K	5%	1/4W	
R953	1-249-415-11	CARBON	680	5%	1/4W	
R954	1-249-438-11	CARBON	56K	5%	1/4W	
R955	1-260-103-11	CARBON	2.2K	5%	1/2W	
R956	1-260-103-11	CARBON	2.2K	5%	1/2W	

Ref. No.	Part No.	Description				Remark
⚠R957	1-217-637-00	FUSIBLE	1	5%	1/4W	F
⚠R959	1-212-881-11	FUSIBLE	100	5%	1/4W	F
⚠R960	1-217-151-00	METAL PLATE	0.22			F
R961	1-249-417-11	CARBON	1K	5%	1/4W	
R962	1-249-431-11	CARBON	15K	5%	1/4W	
R963	1-249-441-11	CARBON	100K	5%	1/4W	
R964	1-260-076-11	CARBON	10	5%	1/2W	
		< THERMISTOR >				
TH931	1-807-796-11	THERMISTOR				

****

*	A-4673-402-A	BD(CD) BOARD, COMPLETE				
		**********				
		< CAPACITOR >				
C101	1-126-607-11	ELECT CHIP	47uF	20%	4V	
C102	1-163-275-11	CERAMIC CHIP	0.001uF	5%	50V	
C103	1-164-346-11	CERAMIC CHIP	1uF		16V	
C105	1-163-038-91	CERAMIC CHIP	0.1uF		25V	
C106	1-164-695-11	CERAMIC CHIP	0.0022uF	5%	50V	
C107	1-164-695-11	CERAMIC CHIP	0.0022uF	5%	50V	
C108	1-164-232-11	CERAMIC CHIP	0.01uF		50V	
C109	1-164-232-11	CERAMIC CHIP	0.01uF		50V	
C110	1-163-989-11	CERAMIC CHIP	0.033uF	10%	25V	
C111	1-163-038-91	CERAMIC CHIP	0.1uF		25V	
C112	1-163-038-91	CERAMIC CHIP	0.1uF		25V	
C113	1-164-695-11	CERAMIC CHIP	0.0022uF	5%	50V	
C114	1-164-005-11	CERAMIC CHIP	0.47uF		25V	
C115	1-126-607-11	ELECT CHIP	47uF	20%	4V	
C116	1-163-016-00	CERAMIC CHIP	0.0039uF	10%	50V	
C117	1-164-005-11	CERAMIC CHIP	0.47uF		25V	
C118	1-107-823-11	CERAMIC CHIP	0.47uF	10%	16V	
C119	1-163-038-91	CERAMIC CHIP	0.1uF		25V	
C120	1-135-201-11	TANTALUM CHIP	10uF	20%	4V	
C121	1-163-038-91	CERAMIC CHIP	0.1uF		25V	
C122	1-164-232-11	CERAMIC CHIP	0.01uF		50V	
C123	1-163-038-91	CERAMIC CHIP	0.1uF		25V	
C124	1-126-607-11	ELECT CHIP	47uF	20%	4V	
C125	1-164-232-11	CERAMIC CHIP	0.01uF		50V	
C126	1-163-038-91	CERAMIC CHIP	0.1uF		25V	
C127	1-164-695-11	CERAMIC CHIP	0.0022uF	5%	50V	
C128	1-163-135-00	CERAMIC CHIP	560PF	5%	50V	
C129	1-163-038-91	CERAMIC CHIP	0.1uF		25V	
C130	1-164-336-11	CERAMIC CHIP	0.33uF		25V	
C131	1-163-038-91	CERAMIC CHIP	0.1uF		25V	
C132	1-163-037-11	CERAMIC CHIP	0.022uF	10%	25V	
C133	1-163-145-00	CERAMIC CHIP	0.0015uF	5%	50V	
C134	1-164-346-11	CERAMIC CHIP	1uF		16V	
C135	1-163-251-11	CERAMIC CHIP	100PF	5%	50V	
C136	1-164-005-11	CERAMIC CHIP	0.47uF		25V	
C137	1-164-232-11	CERAMIC CHIP	0.01uF		50V	

The components identified by mark ⚠ or dotted line with mark ⚠ are critical for safety. Replace only with part number specified.	Les composants identifiés par une marque ⚠sont critiques pour la sécurité. Ne les remplacer que par une pièce portant le numéro spécifié.

BD (CD) BD (MD)

Ref. No.	Part No.	Description			Remark
C139	1-163-235-11	CERAMIC CHIP	22PF	5%	50V
C140	1-163-235-11	CERAMIC CHIP	22PF	5%	50V
C141	1-163-038-91	CERAMIC CHIP	0.1uF		25V
C142	1-163-038-91	CERAMIC CHIP	0.1uF		25V
C145	1-135-201-11	TANTALUM CHIP	10uF	20%	4V
C146	1-135-201-11	TANTALUM CHIP	10uF	20%	4V
C147	1-163-275-11	CERAMIC CHIP	0.001uF	5%	50V
C148	1-163-275-11	CERAMIC CHIP	0.001uF	5%	50V
C149	1-164-346-11	CERAMIC CHIP	1uF		16V
C150	1-163-017-00	CERAMIC CHIP	0.0047uF	10%	50V
C153	1-135-259-11	TANTAL. CHIP	10uF	20%	6.3V
C154	1-163-235-11	CERAMIC CHIP	22PF	5%	50V
		< CONNECTOR>			
CNU101	1-770-014-11	CONNECTOR, FFC/FPC 16P			
CNU102	1-770-013-11	CONNECTOR, FFC/FPC 19P			
		< IC >			
IC101	8-752-069-56	IC CXA1782BQ			
IC102	8-759-291-06	IC BA6397FP			
IC103	8-752-372-94	IC CXD2507AQ			
IC104	8-759-185-29	IC PCM1710U-B			
		< TRANSISTOR >			
Q101	8-729-010-08	TRANSISTOR MSB710-R			
Q102	8-729-424-08	TRANSISTOR UN2111			
Q103	8-729-421-22	TRANSISTOR UN2211			
		< RESISTOR >			
R102	1-216-001-00	METAL CHIP	10	5%	1/10W
R103	1-216-049-91	METAL GLAZE	1K	5%	1/10W
R104	1-216-097-91	METAL GLAZE	100K	5%	1/10W
R105	1-216-093-00	METAL CHIP	68K	5%	1/10W
R106	1-216-093-00	METAL CHIP	68K	5%	1/10W
R107	1-216-093-00	METAL CHIP	68K	5%	1/10W
R108	1-216-093-00	METAL CHIP	68K	5%	1/10W
R109	1-216-097-91	METAL GLAZE	100K	5%	1/10W
R112	1-216-083-00	METAL CHIP	27K	5%	1/10W
R113	1-216-083-00	METAL CHIP	27K	5%	1/10W
R114	1-216-101-00	METAL CHIP	150K	5%	1/10W
R115	1-216-101-00	METAL CHIP	150K	5%	1/10W
R116	1-216-061-00	METAL CHIP	3.3K	5%	1/10W
R117	1-216-069-00	METAL CHIP	6.8K	5%	1/10W
R118	1-216-049-91	METAL GLAZE	1K	5%	1/10W
R119	1-216-089-91	METAL GLAZE	47K	5%	1/10W
R120	1-216-089-91	METAL GLAZE	47K	5%	1/10W
R121	1-216-114-00	METAL GLAZE	510K	5%	1/10W
R122	1-216-097-91	METAL GLAZE	100K	5%	1/10W
R123	1-216-099-00	METAL CHIP	120K	5%	1/10W
R124	1-216-091-00	METAL CHIP	56K	5%	1/10W
R125	1-216-069-00	METAL CHIP	6.8K	5%	1/10W
R126	1-216-063-91	METAL GLAZE	3.9K	5%	1/10W

Ref. No.	Part No.	Description			Remark
R127	1-216-089-91	METAL GLAZE	47K	5%	1/10W
R128	1-216-105-91	METAL GLAZE	220K	5%	1/10W
R129	1-216-049-91	METAL GLAZE	1K	5%	1/10W
R130	1-216-079-00	METAL CHIP	18K	5%	1/10W
R131	1-216-079-00	METAL CHIP	18K	5%	1/10W
R132	1-216-061-00	METAL CHIP	3.3K	5%	1/10W
R133	1-216-061-00	METAL CHIP	3.3K	5%	1/10W
R134	1-216-065-00	METAL CHIP	4.7K	5%	1/10W
R135	1-216-065-00	METAL CHIP	4.7K	5%	1/10W
R136	1-216-073-00	METAL CHIP	10K	5%	1/10W
R137	1-216-065-00	METAL CHIP	4.7K	5%	1/10W
R138	1-216-049-91	METAL GLAZE	1K	5%	1/10W
R139	1-216-033-00	METAL CHIP	220	5%	1/10W
R140	1-216-081-00	METAL CHIP	22K	5%	1/10W
R141	1-216-061-00	METAL CHIP	3.3K	5%	1/10W
R142	1-216-061-00	METAL CHIP	3.3K	5%	1/10W
R143	1-216-121-91	METAL GLAZE	1M	5%	1/10W
R144	1-216-073-00	METAL CHIP	10K	5%	1/10W
R145	1-216-097-91	METAL GLAZE	100K	5%	1/10W
R146	1-216-097-91	METAL GLAZE	100K	5%	1/10W
R147	1-216-049-91	METAL GLAZE	1K	5%	1/10W
R148	1-216-049-91	METAL GLAZE	1K	5%	1/10W
R149	1-216-049-91	METAL GLAZE	1K	5%	1/10W
R150	1-216-037-00	METAL CHIP	330	5%	1/10W
R151	1-216-037-00	METAL CHIP	330	5%	1/10W
R152	1-216-037-00	METAL CHIP	330	5%	1/10W
R153	1-216-082-00	METAL GLAZE	24K	5%	1/10W
R154	1-216-065-00	METAL CHIP	4.7K	5%	1/10W
R156	1-216-085-00	METAL CHIP	33K	5%	1/10W
R157	1-216-069-00	METAL CHIP	6.8K	5%	1/10W
R158	1-216-001-00	METAL CHIP	10	5%	1/10W
		< VARIABLE RESISTOR >			
RV101	1-241-396-11	RES, ADJ, METAL GLAZE 22K (FOCUS BIAS)			
RV102	1-241-396-11	RES, ADJ, METAL GLAZE 22K			
RV103	1-241-396-11	RES, ADJ, METAL GLAZE 22K			
		< SWITCH >			
S101	1-572-085-11	SWITCH, LEAF (LIMIT SWITCH)			
		< VIBRATOR >			
X101	1-579-280-11	VIBRATOR, CRYSTAL (16.9344MHz)			

****

*	A-4673-809-A	BD(MD) BOARD, COMPLETE **********			
		< CAPACITOR >			
C101	1-104-913-11	TANTAL. CHIP	10uF	20%	16V
C102	1-163-038-91	CERAMIC CHIP	0.1uF		25V
C103	1-104-913-11	TANTAL. CHIP	10uF	20%	16V
C104	1-104-913-11	TANTAL. CHIP	10uF	20%	16V

Ref. No.	Part No.	Description			Remark
C105	1-164-232-11	CERAMIC CHIP	0.01uF		50V
C106	1-163-275-11	CERAMIC CHIP	0.001uF	5%	50V
C107	1-164-232-11	CERAMIC CHIP	0.01uF		50V
C108	1-164-232-11	CERAMIC CHIP	0.01uF		50V
C109	1-163-037-11	CERAMIC CHIP	0.022uF	10%	25V
C111	1-164-004-11	CERAMIC CHIP	0.1uF	10%	25V
C112	1-164-232-11	CERAMIC CHIP	0.01uF		50V
C113	1-107-682-11	CERAMIC CHIP	1uF	10%	16V
C114	1-163-038-91	CERAMIC CHIP	0.1uF		25V
C115	1-107-682-11	CERAMIC CHIP	1uF	10%	16V
C116	1-163-019-00	CERAMIC CHIP	0.0068uF	10%	50V
C117	1-164-004-11	CERAMIC CHIP	0.1uF	10%	25V
C119	1-104-913-11	TANTAL. CHIP	10uF	20%	16V
C121	1-126-395-11	ELECT	22uF	20%	16V
C122	1-164-232-11	CERAMIC CHIP	0.01uF		50V
C123	1-163-038-91	CERAMIC CHIP	0.1uF		25V
C124	1-163-038-91	CERAMIC CHIP	0.1uF		25V
C125	1-104-760-11	CERAMIC CHIP	0.047uF	10%	50V
C126	1-107-682-11	CERAMIC CHIP	1uF	10%	16V
C127	1-163-038-91	CERAMIC CHIP	0.1uF		25V
C128	1-164-232-11	CERAMIC CHIP	0.01uF		50V
C129	1-107-823-11	CERAMIC CHIP	0.47uF	10%	16V
C130	1-163-251-11	CERAMIC CHIP	100PF	5%	50V
C131	1-104-760-11	CERAMIC CHIP	0.047uF	10%	50V
C132	1-107-682-11	CERAMIC CHIP	1uF	10%	16V
C133	1-163-017-00	CERAMIC CHIP	0.0047uF	5%	50V
C134	1-163-038-91	CERAMIC CHIP	0.1uF		25V
C135	1-163-038-91	CERAMIC CHIP	0.1uF		25V
C136	1-126-206-11	ELECT CHIP	100uF	20%	6.3V
C141	1-163-038-91	CERAMIC CHIP	0.1uF		25V
C142	1-163-251-11	CERAMIC CHIP	100PF	5%	50V
C143	1-163-251-11	CERAMIC CHIP	100PF	5%	50V
C144	1-163-251-11	CERAMIC CHIP	100PF	5%	50V
C151	1-104-913-11	TANTAL. CHIP	10uF	20%	16V
C152	1-163-038-91	CERAMIC CHIP	0.1uF		25V
C155	1-104-916-11	TANTAL. CHIP	6.8uF	20%	20V
C160	1-104-601-11	ELECT CHIP	10uF	20%	10V
C161	1-104-601-11	ELECT CHIP	10uF	20%	10V
C163	1-164-232-11	CERAMIC CHIP	0.01uF		50V
C164	1-164-232-11	CERAMIC CHIP	0.01uF		50V
C166	1-163-275-11	CERAMIC CHIP	0.001uF	5%	50V
C167	1-163-038-91	CERAMIC CHIP	0.1uF		25V
C169	1-104-913-11	TANTAL. CHIP	10uF	20%	16V
C170	1-104-913-11	TANTAL. CHIP	10uF	20%	16V
C171	1-163-038-91	CERAMIC CHIP	0.1uF		25V
C175	1-163-038-91	CERAMIC CHIP	0.1uF		25V
C176	1-163-227-11	CERAMIC CHIP	10PF	0.5PF	50V
C177	1-163-227-11	CERAMIC CHIP	10PF	0.5PF	50V
C178	1-163-038-91	CERAMIC CHIP	0.1uF		25V
C181	1-104-913-11	TANTAL. CHIP	10uF	20%	16V
C182	1-163-038-91	CERAMIC CHIP	0.1uF		25V
C183	1-163-038-91	CERAMIC CHIP	0.1uF		25V
C184	1-107-836-11	ELECT CHIP	22uF	20%	8V
C185	1-164-611-11	CERAMIC CHIP	0.001uF	10%	500V
C186	1-163-038-91	CERAMIC CHIP	0.1uF		25V
C191	1-126-395-11	ELECT	22uF	20%	16V
C192	1-163-038-91	CERAMIC CHIP	0.1uF		25V
C193	1-164-346-11	CERAMIC CHIP	1uF		16V
C194	1-126-206-11	ELECT CHIP	100uF	20%	6.3V
		< CONNECTOR >			
CN101	1-766-508-11	CONNECTOR, FFC/FPC (ZIF) 22P			
CN102	1-766-510-21	CONNECTOR, FFC/FPC 30P			
CN103	1-766-509-21	CONNECTOR, FFC/FPC 18P			
CN104	1-766-898-21	HOUSING, CONNECTOR(PC BOARD)4P			
		< DIODE >			
D101	8-719-988-62	DIODE 1SS355			
D155	8-719-031-17	DIODE 1SS322-TE85L			
D161	8-719-421-15	DIODE MA8027-L			
D181	8-719-033-60	DIODE F1P2STP			
D183	8-719-033-60	DIODE F1P2STP			
		< IC >			
IC101	8-752-072-68	IC CXA1981AR			
IC102	8-759-243-19	IC TC7SU04F			
IC121	8-752-375-36	IC CXD2535BR			
IC122	8-759-243-19	IC TC7SU04F			
IC151	8-759-179-60	IC MPC17A38VMEL			
IC171	8-759-504-12	IC X24C01S			
IC172	8-759-149-73	IC uPC842G2			
IC181	8-759-095-65	IC TC74ACT540FS			
IC182	8-759-243-19	IC TC7SU04F			
IC191	8-759-822-99	IC L88MS05T-FA			
		< COIL >			
L101	1-414-234-11	INDUCTOR, FERRITE BEAD			
L102	1-414-234-11	INDUCTOR, FERRITE BEAD			
L103	1-414-234-11	INDUCTOR, FERRITE BEAD			
L105	1-414-234-11	INDUCTOR, FERRITE BEAD			
L106	1-414-234-11	INDUCTOR, FERRITE BEAD			
L121	1-414-234-11	INDUCTOR, FERRITE BEAD			
L122	1-412-039-51	INDUCTOR CHIP 100uH			
L151	1-412-622-51	INDUCTOR 10uH			
L152	1-412-622-51	INDUCTOR 10uH			
L153	1-412-039-51	INDUCTOR CHIP 100uH			
L154	1-412-039-51	INDUCTOR CHIP 100uH			
L155	1-410-980-51	INDUCTOR CHIP 1mH			
L161	1-414-234-11	INDUCTOR, FERRITE BEAD			
L162	1-414-234-11	INDUCTOR, FERRITE BEAD			
L195	1-233-316-21	FILTER, CHIP EMI			
		< TRANSISTOR >			
Q101	8-729-905-12	TRANSISTOR DTA144EU			

BD (MD) DETECTION SW DIGITAL

Ref. No.	Part No.	Description			Remark
Q151	8-729-905-18	TRANSISTOR DTC144EU			
Q162	8-729-101-07	TRANSISTOR 2SB798-DL			
Q163	8-729-905-12	TRANSISTOR DTA144EU			
Q164	8-729-924-19	TRANSISTOR DTA123JU			
Q181	8-729-018-75	TRANSISTOR 2SJ278MY			
Q182	8-729-017-65	TRANSISTOR 2SK1764KY			
		< RESISTOR >			
R101	1-216-077-00	METAL CHIP	15K	5%	1/10W
R102	1-216-073-00	METAL CHIP	10K	5%	1/10W
R103	1-216-073-00	METAL CHIP	10K	5%	1/10W
R104	1-216-049-91	METAL GLAZE	1K	5%	1/10W
R105	1-216-065-00	METAL CHIP	4.7K	5%	1/10W
R106	1-216-133-00	METAL CHIP	3.3M	5%	1/10W
R107	1-216-113-00	METAL CHIP	470K	5%	1/10W
R110	1-216-077-00	METAL CHIP	15K	5%	1/10W
R113	1-216-061-00	METAL CHIP	3.3K	5%	1/10W
R114	1-216-025-91	METAL GLAZE	100	5%	1/10W
R116	1-216-069-00	METAL CHIP	6.8K	5%	1/10W
R117	1-216-113-00	METAL CHIP	470K	5%	1/10W
R120	1-216-025-91	METAL GLAZE	100	5%	1/10W
R121	1-216-097-91	METAL GLAZE	100K	5%	1/10W
R122	1-216-295-91	METAL GLAZE	0	5%	1/10W
R124	1-216-025-91	METAL GLAZE	100	5%	1/10W
R125	1-216-025-91	METAL GLAZE	100	5%	1/10W
R128	1-216-053-00	METAL CHIP	1.5K	5%	1/10W
R129	1-216-037-00	METAL CHIP	330	5%	1/10W
R130	1-216-041-00	METAL CHIP	470	5%	1/10W
R131	1-216-073-00	METAL CHIP	10K	5%	1/10W
R132	1-216-097-91	METAL GLAZE	100K	5%	1/10W
R133	1-216-129-00	METAL CHIP	2.2M	5%	1/10W
R134	1-216-037-00	METAL CHIP	330	5%	1/10W
R135	1-216-053-00	METAL CHIP	1.5K	5%	1/10W
R136	1-216-041-00	METAL CHIP	470	5%	1/10W
R137	1-216-025-91	METAL GLAZE	100	5%	1/10W
R139	1-216-017-91	METAL GLAZE	47	5%	1/10W
R140	1-216-017-91	METAL GLAZE	47	5%	1/10W
R141	1-216-295-91	METAL GLAZE	0	5%	1/10W
R142	1-216-073-00	METAL CHIP	10K	5%	1/10W
R143	1-216-073-00	METAL CHIP	10K	5%	1/10W
R144	1-216-025-91	METAL GLAZE	100	5%	1/10W
R145	1-216-121-91	METAL GLAZE	1M	5%	1/10W
R146	1-216-037-00	METAL CHIP	330	5%	1/10W
R147	1-216-025-91	METAL GLAZE	100	5%	1/10W
R148	1-216-045-00	METAL CHIP	680	5%	1/10W
R150	1-216-295-91	METAL GLAZE	0	5%	1/10W
R151	1-216-097-91	METAL GLAZE	100K	5%	1/10W
R154	1-220-262-11	METAL GLAZE	680	5%	1/4W
R155	1-220-262-11	METAL GLAZE	680	5%	1/4W
R158	1-216-121-91	METAL GLAZE	1M	5%	1/10W
R161	1-216-057-00	METAL CHIP	2.2K	5%	1/10W
R162	1-216-057-00	METAL CHIP	2.2K	5%	1/10W
R163	1-216-057-00	METAL CHIP	2.2K	5%	1/10W
R164	1-216-045-00	METAL CHIP	680	5%	1/10W
R165	1-216-097-91	METAL GLAZE	100K	5%	1/10W
R166	1-220-250-11	METAL GLAZE	10	5%	1/2W
R167	1-216-065-00	METAL CHIP	4.7K	5%	1/10W
R169	1-219-724-11	METAL CHIP	1	1%	1/4W
R170	1-216-073-00	METAL CHIP	10K	5%	1/10W
R171	1-216-073-00	METAL CHIP	10K	5%	1/10W
R172	1-216-065-00	METAL CHIP	4.7K	5%	1/10W
R174	1-216-065-00	METAL CHIP	4.7K	5%	1/10W
R176	1-216-065-00	METAL CHIP	4.7K	5%	1/10W
R178	1-216-065-00	METAL CHIP	4.7K	5%	1/10W
R181	1-216-073-00	METAL CHIP	10K	5%	1/10W
R182	1-216-089-91	METAL GLAZE	47K	5%	1/10W
R183	1-216-089-91	METAL GLAZE	47K	5%	1/10W
R186	1-216-134-00	METAL CHIP	2.2	5%	1/8W
R187	1-216-134-00	METAL CHIP	2.2	5%	1/8W
		< VARIABLE RESISTOR >			
RV101	1-241-396-11	RES, ADJ, METAL GLAZE 22K (E-F BALANCE)			
RV102	1-241-396-11	RES, ADJ, METAL GLAZE 22K (LASER POWER)			
		< SWITCH >			
S101	1-572-467-41	SWITCH, PUSH (1 KEY)(LIMIT SWITCH)			
**********					
*	1-653-411-11	DETECTION SW BOARD			
		**********			
		< CONNECTOR >			
CN193	1-770-010-21	CONNECTOR, BOARD TO BOARD 4P			
		< SWITCH >			
S191	1-762-149-11	SWITCH, PUSH (1 KEY) (LOAD OUT DET)			
S192	1-762-149-11	SWITCH, PUSH (1 KEY) (LOAD IN DET)			
S193	1-762-149-11	SWITCH, PUSH (1 KEY) (CHACKING IN DET)			
**********					
*	A-4390-532-A	DIGITAL BOARD, COMPLETE (US)			
*	A-4390-548-A	DIGITAL BOARD, COMPLETE (AEP,G,IT)			
*	A-4390-564-A	DIGITAL BOARD, COMPLETE (SP,HK)			
*	A-4390-729-A	DIGITAL BOARD, COMPLETE (CND)			
*	A-4390-745-A	DIGITAL BOARD, COMPLETE (UK)			
		**********			
		< CAPACITOR >			
C202	1-163-038-91	CERAMIC CHIP	0.1uF		25V
C206	1-163-038-91	CERAMIC CHIP	0.1uF		25V
C207	1-163-038-91	CERAMIC CHIP	0.1uF		25V
C212	1-163-038-91	CERAMIC CHIP	0.1uF		25V
C213	1-126-395-11	ELECT	22uF	20%	16V
C271	1-163-038-91	CERAMIC CHIP	0.1uF		25V

Ref. No.	Part No.	Description			Remark
C273	1-126-395-11	ELECT	22uF	20%	16V
C274	1-163-031-11	CERAMIC CHIP	0.01uF		50V
C275	1-163-091-00	CERAMIC CHIP	8PF		50V
C276	1-163-091-00	CERAMIC CHIP	8PF		50V
C280	1-126-204-11	ELECT CHIP	47uF	20%	16V
C281	1-163-038-91	CERAMIC CHIP	0.1uF		25V
C282	1-163-038-91	CERAMIC CHIP	0.1uF		25V
C284	1-163-091-00	CERAMIC CHIP	8PF		50V
C285	1-126-204-11	ELECT CHIP	47uF	20%	16V
C286	1-163-038-91	CERAMIC CHIP	0.1uF		25V
C287	1-163-038-91	CERAMIC CHIP	0.1uF		25V
C301	1-126-395-11	ELECT	22uF	20%	16V
C302	1-126-395-11	ELECT	22uF	20%	16V
C303	1-126-204-11	ELECT CHIP	47uF	20%	16V
C304	1-126-204-11	ELECT CHIP	47uF	20%	16V
C305	1-163-038-91	CERAMIC CHIP	0.1uF		25V
C306	1-163-038-91	CERAMIC CHIP	0.1uF		25V
C307	1-163-117-00	CERAMIC CHIP	100PF	5%	50V
C308	1-163-117-00	CERAMIC CHIP	100PF	5%	50V
C309	1-126-395-11	ELECT	22uF	20%	16V
C310	1-126-395-11	ELECT	22uF	20%	16V
C311	1-163-001-11	CERAMIC CHIP	220PF	10%	50V
C312	1-163-001-11	CERAMIC CHIP	220PF	10%	50V
C313	1-163-038-91	CERAMIC CHIP	0.1uF		25V
C314	1-126-204-11	ELECT CHIP	47uF	20%	16V
C315	1-163-017-00	CERAMIC CHIP	0.0047uF	5%	50V
C316	1-163-017-00	CERAMIC CHIP	0.0047uF	5%	50V
C317	1-163-017-00	CERAMIC CHIP	0.0047uF	5%	50V
C318	1-163-017-00	CERAMIC CHIP	0.0047uF	5%	50V
C319	1-126-204-11	ELECT CHIP	47uF	20%	16V
C320	1-163-038-91	CERAMIC CHIP	0.1uF		25V
C321	1-126-204-11	ELECT CHIP	47uF	20%	16V
C322	1-163-038-91	CERAMIC CHIP	0.1uF		25V
C323	1-163-038-91	CERAMIC CHIP	0.1uF		25V
C326	1-163-038-91	CERAMIC CHIP	0.1uF		25V
C327	1-126-204-11	ELECT CHIP	47uF	20%	16V
C328	1-163-038-91	CERAMIC CHIP	0.1uF		25V
C329	1-163-038-91	CERAMIC CHIP	0.1uF		25V
C331	1-163-038-91	CERAMIC CHIP	0.1uF		25V
C332	1-126-204-11	ELECT CHIP	47uF	20%	16V
C333	1-163-038-91	CERAMIC CHIP	0.1uF		25V
C334	1-163-038-91	CERAMIC CHIP	0.1uF		25V
C341	1-163-038-91	CERAMIC CHIP	0.1uF		25V
C342	1-126-204-11	ELECT CHIP	47uF	20%	16V
C343	1-163-038-91	CERAMIC CHIP	0.1uF		25V
C344	1-126-395-11	ELECT CHIP	22uF	20%	16V
C351	1-163-038-91	CERAMIC CHIP	0.1uF		25V
C352	1-126-204-11	ELECT CHIP	47uF	20%	16V
C353	1-163-038-91	CERAMIC CHIP	0.1uF		25V
C354	1-126-204-11	ELECT CHIP	47uF	20%	16V
C355	1-163-038-91	CERAMIC CHIP	0.1uF		25V
C356	1-126-204-11	ELECT CHIP	47uF	20%	16V

Ref. No.	Part No.	Description			Remark
C361	1-163-113-00	CERAMIC CHIP	68PF	5%	50V
C362	1-163-113-00	CERAMIC CHIP	68PF	5%	50V
C363	1-163-239-11	CERAMIC CHIP	33PF	5%	50V
C364	1-163-239-11	CERAMIC CHIP	33PF	5%	50V
C365	1-163-239-11	CERAMIC CHIP	33PF	5%	50V
C366	1-163-239-11	CERAMIC CHIP	33PF	5%	50V
C367	1-163-038-91	CERAMIC CHIP	0.1uF		25V
C368	1-163-038-91	CERAMIC CHIP	0.1uF		25V
C369	1-163-133-00	CERAMIC CHIP	470PF	5%	50V
C370	1-163-133-00	CERAMIC CHIP	470PF	5%	50V
C371	1-163-253-11	CERAMIC CHIP	120PF	5%	50V
C372	1-163-253-11	CERAMIC CHIP	120PF	5%	50V
C411	1-164-004-11	CERAMIC CHIP	0.1uF	10%	25V
C412	1-163-037-11	CERAMIC CHIP	0.022uF	10%	25V
C413	1-163-009-11	CERAMIC CHIP	0.001uF	10%	50V
C414	1-163-009-11	CERAMIC CHIP	0.001uF	10%	50V
C415	1-163-113-00	CERAMIC CHIP	68PF	5%	50V
C416	1-163-038-91	CERAMIC CHIP	0.1uF		25V
C417	1-163-038-91	CERAMIC CHIP	0.1uF		25V
C418	1-163-038-91	CERAMIC CHIP	0.1uF		25V
C420	1-126-204-11	ELECT CHIP	47uF	20%	16V
C421	1-163-091-00	CERAMIC CHIP	8PF		50V
C423	1-163-251-11	CERAMIC CHIP	100PF	5%	50V
C424	1-163-251-11	CERAMIC CHIP	100PF	5%	50V
C431	1-164-346-11	CERAMIC CHIP	1uF		16V
C471	1-163-038-91	CERAMIC CHIP	0.1uF		25V
C472	1-163-038-91	CERAMIC CHIP	0.1uF		25V
C473	1-163-038-91	CERAMIC CHIP	0.1uF		25V
C474	1-163-038-91	CERAMIC CHIP	0.1uF		25V
C475	1-163-038-91	CERAMIC CHIP	0.1uF		25V
C477	1-163-038-91	CERAMIC CHIP	0.1uF		25V
		< CONNECTOR >			
CN202	1-774-031-21	CONNECTOR, FFC/FPC 30P			
CN221	1-774-030-21	CONNECTOR, FFC/FPC 18P			
CN223	1-774-333-21	CONNECTOR, FFC/FPC 21P			
CN251	1-774-180-11	PIN, CONNECTOR (PC BOARD) 6P			
CN281	1-774-863-11	PIN, CONNECTOR (PC BOARD) 8P			
		< DIODE >			
D301	8-719-914-42	DIODE DA204K			
D302	8-719-914-42	DIODE DA204K			
D303	8-719-056-15	DIODE F01J4L			
D304	8-719-056-15	DIODE F01J4L			
D341	8-719-056-15	DIODE F01J4L			
D411	8-719-974-98	DIODE HVM17-01			
		< FERRITE BEAD >			
FB272	1-550-907-21	BEAD, FERRITE (CHIP)			
FB274	1-216-295-91	METAL GLAZE	0	5%	1/10W
FB341	1-216-295-91	METAL GLAZE	0	5%	1/10W
FB411	1-216-295-91	METAL GLAZE	0	5%	1/10W

DIGITAL

Ref. No.	Part No.	Description			Remark
FB412	1-216-295-91	METAL GLAZE	0	5%	1/10W
FB471	1-216-295-91	METAL GLAZE	0	5%	1/10W
		< IC >			
IC201	8-759-394-99	IC M37610MD-068FP			
IC271	8-752-371-17	IC CXD2536R			
IC272	8-759-382-21	IC M5M44400BJ-7-L2			
IC301	8-759-352-63	IC CXD8566M			
IC302	8-759-352-59	IC CXA8054M			
IC341	8-759-362-47	IC CXD8567AM			
IC342	8-759-981-48	IC TL082M			
IC343	8-759-981-48	IC TL082M			
IC401	8-759-243-19	IC TC7SU04F			
IC411	8-759-158-96	IC TC9246F-TP1			
IC412	8-759-242-70	IC TC7WU04F			
IC431	8-759-040-83	IC BA6287F			
		< COIL >			
L221	1-550-907-21	BEAD, FERRITE (CHIP)			
L341	1-550-907-21	BEAD, FERRITE (CHIP)			
L344	1-550-907-21	BEAD, FERRITE (CHIP)			
L411	1-412-332-41	INDUCTOR	2.2uH		
L412	1-550-907-21	BEAD, FERRITE (CHIP)			
		< RESISTOR >			
R204	1-216-097-91	METAL GLAZE	100K	5%	1/10W
R206	1-216-073-00	METAL CHIP	10K	5%	1/10W
R209	1-216-097-91	METAL GLAZE	100K	5%	1/10W
R214	1-216-049-91	METAL GLAZE	1K	5%	1/10W
R216	1-216-073-00	METAL CHIP	10K	5%	1/10W
R221	1-216-097-91	METAL GLAZE	100K	5%	1/10W
R223	1-216-097-91	METAL GLAZE	100K	5%	1/10W
R226	1-216-097-91	METAL GLAZE	100K	5%	1/10W
R229	1-216-049-91	METAL GLAZE	1K	5%	1/10W
R230	1-216-049-91	METAL GLAZE	1K	5%	1/10W
R231	1-216-073-00	METAL CHIP	10K	5%	1/10W
R233	1-216-097-91	METAL GLAZE	100K	5%	1/10W
R234	1-216-073-00	METAL CHIP	10K	5%	1/10W
R236	1-216-097-91	METAL GLAZE	100K	5%	1/10W
R237	1-216-097-91	METAL GLAZE	100K	5%	1/10W
R239	1-216-097-91	METAL GLAZE	100K	5%	1/10W
R240	1-216-097-91	METAL GLAZE	100K	5%	1/10W
R241	1-216-073-00	METAL CHIP	10K	5%	1/10W
R242	1-216-073-00	METAL CHIP	10K	5%	1/10W
R243	1-216-097-91	METAL GLAZE	100K	5%	1/10W
R244	1-216-073-00	METAL CHIP	10K	5%	1/10W
R245	1-216-049-91	METAL GLAZE	1K	5%	1/10W
R246	1-216-065-00	METAL CHIP	4.7K	5%	1/10W
R247	1-216-073-00	METAL CHIP	10K	5%	1/10W
R248	1-216-073-00	METAL CHIP	10K	5%	1/10W
R249	1-216-073-00	METAL CHIP	10K	5%	1/10W

Ref. No.	Part No.	Description			Remark
R250	1-216-073-00	METAL CHIP	10K	5%	1/10W
R251	1-216-073-00	METAL CHIP	10K	5%	1/10W
R252	1-216-073-00	METAL CHIP	10K	5%	1/10W
R253	1-163-017-00	CERAMIC CHIP	0.0047uF	5%	50V
R254	1-163-017-00	CERAMIC CHIP	0.0047uF	5%	50V
R255	1-163-017-00	CERAMIC CHIP	0.0047uF	5%	50V
R256	1-163-017-00	CERAMIC CHIP	0.0047uF	5%	50V
R257	1-216-049-91	METAL GLAZE	1K	5%	1/10W
R258	1-216-049-91	METAL GLAZE	1K	5%	1/10W
R271	1-216-097-91	METAL GLAZE	100K	5%	1/10W
R272	1-216-097-91	METAL GLAZE	100K	5%	1/10W
R273	1-216-097-91	METAL GLAZE	100K	5%	1/10W
R274	1-216-097-91	METAL GLAZE	100K	5%	1/10W
R275	1-216-097-91	METAL GLAZE	100K	5%	1/10W
R276	1-216-037-00	METAL CHIP	330	5%	1/10W
R277	1-216-033-00	METAL CHIP	220	5%	1/10W
R278	1-216-049-91	METAL GLAZE	1K	5%	1/10W
R279	1-216-295-91	METAL GLAZE	0	5%	1/10W
R280	1-216-295-91	METAL GLAZE	0	5%	1/10W
R281	1-216-041-00	METAL CHIP	470	5%	1/10W
R282	1-216-025-91	METAL GLAZE	100	5%	1/10W
R283	1-216-033-00	METAL CHIP	220	5%	1/10W
R284	1-216-063-91	METAL GLAZE	3.9K	5%	1/10W
R285	1-216-049-91	METAL GLAZE	1K	5%	1/10W
R286	1-216-295-91	METAL GLAZE	0	5%	1/10W
R287	1-216-295-91	METAL GLAZE	0	5%	1/10W
R288	1-216-295-91	METAL GLAZE	0	5%	1/10W
R301	1-216-081-00	METAL CHIP	22K	5%	1/10W
R302	1-216-081-00	METAL CHIP	22K	5%	1/10W
R303	1-216-081-00	METAL CHIP	22K	5%	1/10W
R304	1-216-081-00	METAL CHIP	22K	5%	1/10W
R305	1-216-017-91	METAL GLAZE	47	5%	1/10W
R306	1-216-017-91	METAL GLAZE	47	5%	1/10W
R307	1-216-017-91	METAL GLAZE	47	5%	1/10W
R308	1-216-033-00	METAL CHIP	220	5%	1/10W
R341	1-216-041-00	METAL GLAZE	470	5%	1/10W
R361	1-216-687-11	METAL CHIP	33K	0.5%	1/10W
R362	1-216-687-11	METAL CHIP	33K	0.5%	1/10W
R363	1-208-814-11	METAL CHIP	22K	0.50%	1/10W
R364	1-208-814-11	METAL CHIP	22K	0.50%	1/10W
R365	1-216-687-11	METAL CHIP	33K	0.5%	1/10W
R366	1-216-687-11	METAL CHIP	33K	0.5%	1/10W
R367	1-208-814-11	METAL CHIP	22K	0.50%	1/10W
R368	1-208-814-11	METAL CHIP	22K	0.50%	1/10W
R369	1-216-695-11	METAL CHIP	68K	0.5%	1/10W
R370	1-216-695-11	METAL CHIP	68K	0.5%	1/10W
R371	1-216-695-11	METAL CHIP	68K	0.5%	1/10W
R372	1-216-695-11	METAL CHIP	68K	0.5%	1/10W
R373	1-208-810-11	METAL CHIP	15K	0.50%	1/10W
R374	1-208-810-11	METAL CHIP	15K	0.50%	1/10W
R375	1-208-810-11	METAL CHIP	15K	0.50%	1/10W
R376	1-208-810-11	METAL CHIP	15K	0.50%	1/10W

Ref. No.	Part No.	Description			Remark
R401	1-550-907-21	BEAD, FERRITE	(CHIP)		
R402	1-216-295-91	METAL GLAZE	0	5%	1/10W
R410	1-550-907-21	BEAD, FERRITE	(CHIP)		
R411	1-208-810-11	METAL CHIP	15K	0.50%	1/10W
R412	1-208-810-11	METAL CHIP	15K	0.50%	1/10W
R413	1-208-810-11	METAL CHIP	15K	0.50%	1/10W
R414	1-208-810-11	METAL CHIP	15K	0.50%	1/10W
R415	1-216-049-91	METAL GLAZE	1K	5%	1/10W
R416	1-216-049-91	METAL GLAZE	1K	5%	1/10W
R417	1-216-121-91	METAL GLAZE	1M	5%	1/10W
R418	1-216-041-00	METAL GLAZE	470	5%	1/10W
R420	1-216-295-91	METAL GLAZE	0	5%	1/10W
R431	1-216-021-00	METAL CHIP	68	5%	1/10W
R432	1-216-021-00	METAL CHIP	68	5%	1/10W
R461	1-216-097-91	METAL GLAZE	100K	5%	1/10W
R601	1-216-025-91	METAL GLAZE	100	5%	1/10W
R604	1-216-073-00	METAL CHIP	10K	5%	1/10W
R610	1-550-907-21	BEAD, FERRITE	(CHIP)		
R611	1-550-907-21	BEAD, FERRITE	(CHIP)		
R612	1-550-907-21	BEAD, FERRITE	(CHIP)		
R613	1-550-907-21	BEAD, FERRITE	(CHIP)		
R614	1-216-295-91	METAL GLAZE	0	5%	1/10W
R615	1-550-907-21	BEAD, FERRITE	(CHIP)		
R616	1-550-907-21	BEAD, FERRITE	(CHIP)		
R617	1-550-907-21	BEAD, FERRITE	(CHIP)		
R619	1-550-907-21	BEAD, FERRITE	(CHIP)		
R620	1-550-907-21	BEAD, FERRITE	(CHIP)		
R621	1-550-907-21	BEAD, FERRITE	(CHIP)		
R623	1-550-907-21	BEAD, FERRITE	(CHIP)		
R624	1-550-907-21	BEAD, FERRITE	(CHIP)		
R625	1-550-907-21	BEAD, FERRITE	(CHIP)		
R626	1-550-907-21	BEAD, FERRITE	(CHIP)		
R627	1-216-025-91	METAL GLAZE	100	5%	1/10W
R630	1-216-049-91	METAL GLAZE	1K	5%	1/10W
R631	1-216-049-91	METAL GLAZE	1K	5%	1/10W
R632	1-216-049-91	METAL GLAZE	1K	5%	1/10W
R633	1-216-049-91	METAL GLAZE	1K	5%	1/10W
R634	1-216-049-91	METAL GLAZE	1K	5%	1/10W
R635	1-216-049-91	METAL GLAZE	1K	5%	1/10W
R640	1-550-907-21	BEAD, FERRITE	(CHIP)		
R641	1-550-907-21	BEAD, FERRITE	(CHIP)		
R642	1-550-907-21	BEAD, FERRITE	(CHIP)		
R643	1-550-907-21	BEAD, FERRITE	(CHIP)		
R644	1-550-907-21	BEAD, FERRITE	(CHIP)		
R646	1-550-907-21	BEAD, FERRITE	(CHIP)		
		< VIBRATOR >			
X201	1-760-493-11	VIBRATOR, CERAMIC (CHIP TYPE)(8MHz)			
X203	1-760-841-11	VIBRATOR, CRYSTAL (45.1584MHz)			

****

Ref. No.	Part No.	Description			Remark
*	1-661-322-11	DISPLAY BOARD			
		**********			
*	4-980-523-01	HOLDER (FL)			
		< CAPACITOR >			
C501	1-124-261-00	ELECT	10uF	20%	50V
C537	1-163-025-11	CERAMIC CHIP	0.001uF		50V
C538	1-163-025-11	CERAMIC CHIP	0.001uF		50V
C539	1-163-025-11	CERAMIC CHIP	0.001uF		50V
C540	1-163-001-11	CERAMIC CHIP	220PF	10%	50V
C541	1-163-001-11	CERAMIC CHIP	220PF	10%	50V
C542	1-163-001-11	CERAMIC CHIP	220PF	10%	50V
C543	1-163-001-11	CERAMIC CHIP	220PF	10%	50V
C544	1-163-001-11	CERAMIC CHIP	220PF	10%	50V
C545	1-163-001-11	CERAMIC CHIP	220PF	10%	50V
C546	1-163-001-11	CERAMIC CHIP	220PF	10%	50V
C547	1-163-001-11	CERAMIC CHIP	220PF	10%	50V
C548	1-163-001-11	CERAMIC CHIP	220PF	10%	50V
C549	1-163-001-11	CERAMIC CHIP	220PF	10%	50V
C550	1-163-001-11	CERAMIC CHIP	220PF	10%	50V
C551	1-163-001-11	CERAMIC CHIP	220PF	10%	50V
C552	1-163-001-11	CERAMIC CHIP	220PF	10%	50V
C553	1-124-261-00	ELECT	10uF	20%	50V
C554	1-124-234-00	ELECT	22uF	20%	16V
C555	1-165-319-11	CERAMIC CHIP	0.1uF		50V
C559	1-163-025-11	CERAMIC CHIP	0.001uF		50V
C560	1-163-251-11	CERAMIC CHIP	100PF	5%	50V
C561	1-124-261-00	ELECT	10uF	20%	50V
C562	1-165-319-11	CERAMIC CHIP	0.1uF		50V
C701	1-163-031-11	CERAMIC CHIP	0.01uF		50V
C702	1-163-031-11	CERAMIC CHIP	0.01uF		50V
C703	1-163-031-11	CERAMIC CHIP	0.01uF		50V
C704	1-163-031-11	CERAMIC CHIP	0.01uF		50V
C705	1-163-031-11	CERAMIC CHIP	0.01uF		50V
C706	1-163-031-11	CERAMIC CHIP	0.01uF		50V
		< CONNECTOR >			
CN551	1-568-802-11	SOCKET, CONNECTOR 19P			
* CN701	1-564-706-11	PIN, CONNECTOR (SMALL TYPE) 4P			
* CN702	1-564-339-00	PIN, CONNECTOR 5P			
* CN705	1-564-705-11	PIN, CONNECTOR (SMALL TYPE) 3P			
		< DIODE >			
D501	8-719-045-69	DIODE MA5062-(TX)			
D701	8-719-422-31	DIODE MA8047-M			
D702	8-719-421-36	DIODE MA8036-L			
		< INDICATOR TUBE >			
FL501	1-517-520-11	INDICATOR TUBE, FLUORESCENT			

DISPLAY HP IR LOADING MAIN

Ref. No.	Part No.	Description			Remark
		< IC >			
IC501	8-759-297-23	IC M66004M8FP			
IC701	8-759-822-09	IC LB1641			
IC702	8-759-822-09	IC LB1641			
		< JUMPER RESISTOR >			
JW713	1-216-295-91	CONDUCTOR, CHIP			
JW714	1-216-295-91	CONDUCTOR, CHIP			
JW715	1-216-295-91	CONDUCTOR, CHIP			
		< TRANSISTOR >			
Q501	8-729-107-43	TRANSISTOR 2SC3624-L18			
Q502	8-729-107-43	TRANSISTOR 2SC3624-L18			
Q503	8-729-107-43	TRANSISTOR 2SC3624-L18			
		< RESISTOR >			
R501	1-216-049-91	METAL GLAZE	1K	5%	1/10W
R502	1-216-049-91	METAL GLAZE	1K	5%	1/10W
R503	1-216-049-91	METAL GLAZE	1K	5%	1/10W
R505	1-216-085-00	METAL CHIP	33K	5%	1/10W
R506	1-216-057-00	METAL CHIP	2.2K	5%	1/10W
R507	1-216-049-91	METAL GLAZE	1K	5%	1/10W
R508	1-216-049-91	METAL GLAZE	1K	5%	1/10W
R509	1-216-081-00	METAL CHIP	22K	5%	1/10W
R551	1-216-049-91	METAL GLAZE	1K	5%	1/10W
R552	1-216-049-91	METAL GLAZE	1K	5%	1/10W
R553	1-216-049-91	METAL GLAZE	1K	5%	1/10W
R554	1-216-049-91	METAL GLAZE	1K	5%	1/10W
R585	1-216-097-91	METAL GLAZE	100K	5%	1/10W
R586	1-216-097-91	METAL GLAZE	100K	5%	1/10W
R587	1-216-097-91	METAL GLAZE	100K	5%	1/10W
R588	1-216-097-91	METAL GLAZE	100K	5%	1/10W
R704	1-216-025-91	METAL GLAZE	100	5%	1/10W
R705	1-216-025-91	METAL GLAZE	100	5%	1/10W
R706	1-216-025-91	METAL GLAZE	100	5%	1/10W
R707	1-216-025-91	METAL GLAZE	100	5%	1/10W
R708	1-216-073-00	METAL CHIP	10K	5%	1/10W
R709	1-216-073-00	METAL CHIP	10K	5%	1/10W
R710	1-216-061-00	METAL CHIP	3.3K	5%	1/10W
R714	1-216-041-00	METAL CHIP	470	5%	1/10W
R715	1-216-041-00	METAL CHIP	470	5%	1/10W

****

*	1-661-325-11	HP BOARD			
		*********			
		< CAPACITOR >			
C719	1-163-251-11	CERAMIC CHIP	100PF	5%	50V
C720	1-163-251-11	CERAMIC CHIP	100PF	5%	50V
C722	1-165-319-11	CERAMIC CHIP	0.1uF		50V

Ref. No.	Part No.	Description			Remark
		< JACK >			
J701	1-691-293-41	JACK (🎧)			
		< RESISTOR >			
R526	1-216-075-00	METAL CHIP	12K	5%	1/10W
		< SWITCH >			
S526	1-554-303-21	SWITCH, TACTILE (⏏ CD)			

****

*	1-661-329-11	IR BOARD			
		*********			
		< CAPACITOR >			
C591	1-165-319-11	CERAMIC CHIP	0.1uF		50V
		< IC >			
IC503	8-749-923-80	IC GP1U90XB			
		< RESISTOR >			
R534	1-216-075-00	METAL CHIP	12K	5%	1/10W
R591	1-216-295-91	CONDUCTOR,	CHIP		
R592	1-216-295-91	CONDUCTOR,	CHIP		
		< SWITCH >			
S534	1-554-303-21	SWITCH, TACTILE (⏏ MD)			

****

*	1-634-461-11	LOADING BOARD			
		**********			
		< CONNECTOR >			
* CN291	1-564-498-11	PIN, CONNECTOR 5P			
		< SWITCH >			
S291	1-571-924-11	SWITCH, LEAF (LOAD OUT)			
S292	1-571-924-11	SWITCH, LEAF (LOAD IN)			

****

*	A-4390-518-A	MAIN BOARD, COMPLETE (US)			
*	A-4390-534-A	MAIN BOARD, COMPLETE (AEP,G,IT)			
*	A-4390-550-A	MAIN BOARD, COMPLETE (SP,HK)			
*	A-4390-715-A	MAIN BOARD, COMPLETE (CND)			
*	A-4390-731-A	MAIN BOARD, COMPLETE (UK)			
		**********			
	1-537-770-21	TERMINAL BOARD, GROUND			
		< CAPACITOR >			
C101	1-126-059-11	ELECT	10uF	20%	63V
C102	1-126-059-11	ELECT	10uF	20%	63V
C103	1-124-907-11	ELECT	10uF	20%	50V

Ref. No.	Part No.	Description			Remark
C104	1-124-907-11	ELECT	10uF	20%	50V
C105	1-126-059-11	ELECT	10uF	20%	63V
C106	1-137-367-11	FILM	0.0033uF	5%	50V
C107	1-126-059-11	ELECT	10uF	20%	63V
C108	1-136-171-00	FILM	0.33uF	5%	50V
C109	1-126-059-11	ELECT	10uF	20%	63V
C110	1-124-907-11	ELECT	10uF	20%	50V
C112	1-126-059-11	ELECT	10uF	20%	63V
C113	1-164-159-21	CERAMIC	0.1uF		50V
C114	1-162-306-11	CERAMIC	0.01uF	30%	16V
C115	1-162-306-11	CERAMIC	0.01uF	30%	16V
C116	1-162-306-11	CERAMIC	0.01uF	30%	16V
C117	1-164-159-21	CERAMIC	0.1uF		50V
C119	1-164-159-21	CERAMIC	0.1uF		50V
C123	1-126-059-11	ELECT	10uF	20%	63V
C124	1-124-907-11	ELECT	10uF	20%	50V
C127	1-124-907-11	ELECT	10uF	20%	50V
C141	1-130-479-00	FILM	0.0047uF	5%	50V
C142	1-164-159-21	CERAMIC	0.1uF		50V
C151	1-130-475-00	FILM	0.0022uF	5%	50V
C201	1-124-907-11	ELECT	10uF	20%	50V
C202	1-126-059-11	ELECT	10uF	20%	63V
C203	1-124-907-11	ELECT	10uF	20%	50V
C204	1-124-907-11	ELECT	10uF	20%	50V
C205	1-126-059-11	ELECT	10uF	20%	63V
C206	1-137-367-11	FILM	0.0033uF	5%	50V
C207	1-126-059-11	ELECT	10uF	20%	63V
C208	1-136-171-00	FILM	0.33uF	5%	50V
C209	1-126-059-11	ELECT	10uF	20%	63V
C210	1-124-907-11	ELECT	10uF	20%	50V
C219	1-164-159-21	CERAMIC	0.1uF		50V
C223	1-126-059-11	ELECT	10uF	20%	63V
C227	1-124-907-11	ELECT	10uF	20%	50V
C241	1-130-479-00	FILM	0.0047uF	5%	50V
C251	1-130-475-00	FILM	0.0022uF	5%	50V
C301	1-162-206-31	CERAMIC	20PF	5%	50V
C302	1-162-206-31	CERAMIC	20PF	5%	50V
C303	1-164-159-21	CERAMIC	0.1uF		50V
C304	1-164-159-21	CERAMIC	0.1uF		50V
C306	1-164-159-21	CERAMIC	0.1uF		50V
C307	1-164-159-21	CERAMIC	0.1uF		50V
C308	1-164-159-21	CERAMIC	0.1uF		50V
C309	1-164-159-21	CERAMIC	0.1uF		50V
C310	1-164-159-21	CERAMIC	0.1uF		50V
C311	1-164-159-21	CERAMIC	0.1uF		50V
C313	1-162-294-31	CERAMIC	0.001uF	10%	50V
C314	1-162-294-31	CERAMIC	0.001uF	10%	50V
C315	1-162-294-31	CERAMIC	0.001uF	10%	50V
C316	1-162-294-31	CERAMIC	0.001uF	10%	50V
C317	1-162-282-31	CERAMIC	100PF	10%	50V
C318	1-136-177-00	FILM	1uF	5%	50V
C319	1-124-907-11	ELECT	10uF	20%	50V
C320	1-164-159-21	CERAMIC	0.1uF		50V
C801	1-126-224-11	ELECT	4700uF	20%	42V
C802	1-126-224-11	ELECT	4700uF	20%	42V
C803	1-136-165-00	FILM	0.1uF	5%	50V
C804	1-136-165-00	FILM	0.1uF	5%	50V
C811	1-126-943-11	ELECT	2200uF	20%	25V
C812	1-164-159-21	CERAMIC	0.1uF		50V
C813	1-164-159-21	CERAMIC	0.1uF		50V
C814	1-164-159-21	CERAMIC	0.1uF		50V
C815	1-126-941-11	ELECT	470uF	20%	16V
C816	1-164-159-21	CERAMIC	0.1uF		50V
C817	1-124-907-11	ELECT	10uF	20%	50V
C818	1-104-664-11	ELECT	47uF	20%	25V
C819	1-124-907-11	ELECT	10uF	20%	50V
C821	1-115-582-11	ELECT	27000uF	20%	16
C822	1-164-159-21	CERAMIC	0.1uF		50V
C823	1-164-159-21	CERAMIC	0.1uF		50V
C824	1-104-664-11	ELECT	47uF	20%	25V
C825	1-124-443-00	ELECT	100uF	20%	10V
C826	1-124-443-00	ELECT	100uF	20%	10V
C827	1-126-059-11	ELECT	10uF	20%	63V
C828	1-124-443-00	ELECT	100uF	20%	10V
C829	1-124-472-11	ELECT	470uF	20%	10V
C835	1-124-443-00	ELECT	100uF	20%	10V
C836	1-124-443-00	ELECT	100uF	20%	10V
C838	1-164-159-21	CERAMIC	0.1uF		50V
C841	1-164-159-21	CERAMIC	0.1uF		50V
C842	1-124-907-11	ELECT	10uF	20%	50V
C851	1-125-507-11	CAPACITOR	0.22F		5.5V
C852	1-110-489-11	CAPACITOR	1F		5.5V
C853	1-124-443-00	ELECT	100uF	20%	10V
C854	1-136-165-00	FILM	0.1uF	5%	50V
C855	1-164-159-21	CERAMIC	0.1uF		50V
C861	1-104-665-11	ELECT	100uF	20%	16V
C862	1-124-903-11	ELECT	1uF	20%	50V
C863	1-162-294-31	CERAMIC	0.001uF	10%	50V
C871	1-164-159-21	CERAMIC	0.1uF		50V
C880	1-124-261-00	ELECT	10uF	20%	50V
C881	1-124-261-00	ELECT	10uF	20%	50V
C882	1-124-261-00	ELECT	10uF	20%	50V
C9003	1-163-038-91	CERAMIC CHIP	0.1uF		25V

< CONNECTOR >

*	CN101	1-564-512-11	PLUG, CONNECTOR 9P
	CN102	1-564-511-11	PLUG, CONNECTOR 8P
*	CN103	1-568-856-11	SOCKET, CONNECTOR 13P
*	CN104	1-568-834-11	SOCKET, CONNECTOR 15P
	CN105	1-770-067-11	CONNECTOR, FFC/FPC 19P
*	CN106	1-564-710-11	PIN, CONNECTOR (SMALL TYPE) 8P
	CN107	1-568-802-11	SOCKET, CONNECTOR 19P
	CN109	1-770-649-11	CONNECTOR, FFC/FPC 21P
	CN110	1-568-802-11	SOCKET, CONNECTOR 19P

MAIN

Ref. No.	Part No.	Description	Remark
CN111	1-564-506-11	PLUG, CONNECTOR 3P	
* CN112	1-564-506-11	PLUG, CONNECTOR 3P	
* CN113	1-564-506-11	PLUG, CONNECTOR 3P	
		< DIODE >	
D301	8-719-987-63	DIODE 1N4148M	
D801	8-719-500-56	DIODE D3SBA20	
D811	8-719-200-82	DIODE 11ES2	
D812	8-719-200-82	DIODE 11ES2	
D813	8-719-200-82	DIODE 11ES2	
D814	8-719-200-82	DIODE 11ES2	
D815	8-719-010-39	DIODE UZ-5.1BSC	
D821	8-719-500-56	DIODE D3SBA20	
D822	8-719-987-63	DIODE 1N4148M	
D825	8-719-200-82	DIODE 11ES2	
D826	8-719-987-63	DIODE 1N4148M	
D841	8-719-934-13	DIODE HZS24-1L	
D842	8-719-910-25	DIODE HZ12B2L	
D851	8-719-200-82	DIODE 11ES2	
D852	8-719-200-82	DIODE 11ES2	
D853	8-719-200-82	DIODE 11ES2	
D854	8-719-987-63	DIODE 1N4148M	
D855	8-719-987-63	DIODE 1N4148M	
D856	8-719-987-63	DIODE 1N4148M	
D861	8-719-987-63	DIODE 1N4148M	
D862	8-719-987-63	DIODE 1N4148M	
D863	8-719-987-63	DIODE 1N4148M	
D871	8-719-987-63	DIODE 1N4148M	
D872	8-719-987-63	DIODE 1N4148M	
		< FERRITE BEAD >	
FB101	1-410-397-21	FERRITE BEAD 1.1uH	
FB102	1-410-397-21	FERRITE BEAD 1.1uH	
		< FUSE>	
⚠F821	1-532-782-11	FUSE, MICHRO (4A 125V)(US,CND)	
⚠F822	1-532-782-11	FUSE, MICHRO (4A 125V)(US,CND)	
		< IC >	
IC001	8-759-390-50	IC uPC2408AHF	
IC002	8-759-390-50	IC uPC2408AHF	
IC101	8-752-074-41	IC CXA1946AQ	
IC301	8-759-426-06	IC uPD78058GC-243-3B9	
IC811	8-759-604-39	IC M5F78M12	
IC821	8-759-290-19	IC BA3960	
IC831	8-759-290-19	IC BA3960	
IC851	8-759-327-15	IC M62005L	
IC852	8-759-165-80	IC PST600C-T	
		< IC LINK >	
⚠ICP821	1-532-845-21	LINC, IC (4A 250V)(AEP,UK,G,IT,SP,HK)	

Ref. No.	Part No.	Description	Remark
⚠ICP822	1-532-845-21	LINC, IC (4A 250V)(AEP,UK,G,IT,SP,HK)	
		< JUMPER RESISTOR >	
JW130	1-162-306-11	CERAMIC 0.01uF 30% 16V	
JW144	1-249-429-11	CARBON 10K 5% 1/4W	
JW145	1-249-429-11	CARBON 10K 5% 1/4W	
JW240	1-410-509-11	INDUCTOR 10uH	
		< COIL >	
L301	1-410-521-11	INDUCTOR 100uH	
		< TRANSISTOR >	
Q121	8-729-141-30	TRANSISTOR 2SC3623A-LK	
Q122	8-729-900-63	TRANSISTOR DTA124ES	
Q131	8-729-422-73	TRANSISTOR UN4212	
Q132	8-729-900-63	TRANSISTOR DTA124ES	
Q133	8-729-141-30	TRANSISTOR 2SC3623A-LK	
Q221	8-729-141-30	TRANSISTOR 2SC3623A-LK	
Q231	8-729-422-73	TRANSISTOR UN4212	
Q233	8-729-141-30	TRANSISTOR 2SC3623A-LK	
Q811	8-729-111-29	TRANSISTOR 2SD1616A-K	
Q812	8-729-900-63	TRANSISTOR DTA124ES	
Q821	8-729-111-29	TRANSISTOR 2SD1616A-K	
Q822	8-729-900-63	TRANSISTOR DTA124ES	
Q823	8-729-900-63	TRANSISTOR DTA124ES	
Q841	8-729-140-04	TRANSISTOR 2SB1116A-L	
Q842	8-729-140-04	TRANSISTOR 2SB1116A-L	
Q851	8-729-422-73	TRANSISTOR UN4212	
Q852	8-729-620-05	TRANSISTOR 2SC2603-EF	
Q871	8-729-140-04	TRANSISTOR 2SB1116A-L	
Q872	8-729-620-05	TRANSISTOR 2SC2603-EF	
Q873	8-729-620-05	TRANSISTOR 2SC2603-EF	
Q874	8-729-620-05	TRANSISTOR 2SC2603-EF	
		< RESISTOR >	
R101	1-249-441-11	CARBON 100K 5% 1/4W	
R103	1-247-807-31	CARBON 100 5% 1/4W	
R111	1-249-417-11	CARBON 1K 5% 1/4W	
R112	1-249-419-11	CARBON 1.5K 5% 1/4W (US,CND,SP,HK)	
R125	1-249-429-11	CARBON 10K 5% 1/4W	
R126	1-249-417-11	CARBON 1K 5% 1/4W	
R127	1-249-417-11	CARBON 1K 5% 1/4W	
R128	1-249-417-11	CARBON 1K 5% 1/4W	
R129	1-249-441-11	CARBON 100K 5% 1/4W	
R131	1-249-429-11	CARBON 10K 5% 1/4W	
R132	1-249-429-11	CARBON 10K 5% 1/4W	
R133	1-249-441-11	CARBON 100K 5% 1/4W	
R134	1-249-417-11	CARBON 1K 5% 1/4W	
R141	1-249-415-11	CARBON 680 5% 1/4W	
R142	1-249-431-11	CARBON 15K 5% 1/4W	

Ref. No.	Part No.	Description			Remark
R151	1-249-425-11	CARBON	4.7K	5%	1/4W
R152	1-249-427-11	CARBON	6.8K	5%	1/4W
R157	1-249-441-11	CARBON	100K	5%	1/4W
R158	1-249-417-11	CARBON	1K	5%	1/4W
R161	1-249-417-11	CARBON	1K	5%	1/4W
R162	1-249-417-11	CARBON	1K	5%	1/4W
R163	1-247-807-31	CARBON	100	5%	1/4W
R164	1-249-417-11	CARBON	1K	5%	1/4W
R165	1-249-441-11	CARBON	100K	5%	1/4W
R201	1-249-441-11	CARBON	100K	5%	1/4W
R203	1-247-807-31	CARBON	100	5%	1/4W
R211	1-249-417-11	CARBON	1K	5%	1/4W
R212	1-249-419-11	CARBON	1.5K	5%	1/4W (US,CND,SP,HK)
R225	1-249-429-11	CARBON	10K	5%	1/4W
R226	1-249-417-11	CARBON	1K	5%	1/4W
R227	1-249-417-11	CARBON	1K	5%	1/4W
R231	1-249-429-11	CARBON	10K	5%	1/4W
R232	1-249-429-11	CARBON	10K	5%	1/4W
R234	1-249-417-11	CARBON	1K	5%	1/4W
R241	1-249-415-11	CARBON	680	5%	1/4W
R242	1-249-431-11	CARBON	15K	5%	1/4W
R251	1-249-425-11	CARBON	4.7K	5%	1/4W
R252	1-249-427-11	CARBON	6.8K	5%	1/4W
R257	1-249-441-11	CARBON	100K	5%	1/4W
R258	1-249-417-11	CARBON	1K	5%	1/4W
R301	1-249-441-11	CARBON	100K	5%	1/4W
R302	1-249-429-11	CARBON	10K	5%	1/4W
R303	1-247-807-31	CARBON	100	5%	1/4W
R304	1-247-807-31	CARBON	100	5%	1/4W
R305	1-247-807-31	CARBON	100	5%	1/4W
R306	1-247-807-31	CARBON	100	5%	1/4W
R307	1-247-807-31	CARBON	100	5%	1/4W
R308	1-249-429-11	CARBON	10K	5%	1/4W
R309	1-249-429-11	CARBON	10K	5%	1/4W
R310	1-249-429-11	CARBON	10K	5%	1/4W
R311	1-249-429-11	CARBON	10K	5%	1/4W
R312	1-249-417-11	CARBON	1K	5%	1/4W
R313	1-247-807-31	CARBON	100	5%	1/4W
R314	1-247-807-31	CARBON	100	5%	1/4W
R315	1-247-807-31	CARBON	100	5%	1/4W
R316	1-247-807-31	CARBON	100	5%	1/4W
R317	1-247-807-31	CARBON	100	5%	1/4W
R318	1-247-807-31	CARBON	100	5%	1/4W
R319	1-247-807-31	CARBON	100	5%	1/4W
R320	1-247-807-31	CARBON	100	5%	1/4W
R321	1-247-807-31	CARBON	100	5%	1/4W
R322	1-247-807-31	CARBON	100	5%	1/4W
R323	1-249-429-11	CARBON	10K	5%	1/4W (US,CND)
R323	1-249-421-11	CARBON	2.2K	5%	1/4W (AEP,UK,G,IT)
R323	1-249-431-11	CARBON	15K	5%	1/4W (SP,HK)
R330	1-249-425-11	CARBON	4.7K	5%	1/4W
R331	1-249-425-11	CARBON	4.7K	5%	1/4W
R332	1-249-425-11	CARBON	4.7K	5%	1/4W
R348	1-249-429-11	CARBON	10K	5%	1/4W
R381	1-249-423-11	CARBON	3.3K	5%	1/4W (AEP,UK,G,IT)
R381	1-249-425-11	CARBON	4.7K	5%	1/4W (SP,HK)
R383	1-249-417-11	CARBON	1K	5%	1/4W
⚠R716	1-219-122-91	FUSIBLE	0.33	5%	1/4W F
⚠R801	1-212-881-11	FUSIBLE	100	5%	1/4W F
⚠R811	1-219-122-91	FUSIBLE	0.33	5%	1/4W F
⚠R812	1-219-122-91	FUSIBLE	0.33	5%	1/4W F
R813	1-247-815-91	CARBON	220	5%	1/4W
R814	1-249-429-11	CARBON	10K	5%	1/4W
R815	1-247-807-31	CARBON	100	5%	1/4W
R816	1-247-807-31	CARBON	100	5%	1/4W
R817	1-247-807-31	CARBON	100	5%	1/4W
R818	1-247-815-91	CARBON	220	5%	1/4W
R823	1-247-863-91	CARBON	22K	5%	1/4W
R824	1-249-425-11	CARBON	4.7K	5%	1/4W
R825	1-249-430-11	CARBON	12K	5%	1/4W
R826	1-249-423-11	CARBON	3.3K	5%	1/4W
R827	1-249-429-11	CARBON	10K	5%	1/4W
R828	1-247-815-91	CARBON	220	5%	1/4W
R829	1-249-429-11	CARBON	10K	5%	1/4W
R833	1-249-431-11	CARBON	15K	5%	1/4W
R834	1-249-425-11	CARBON	4.7K	5%	1/4W
R835	1-249-431-11	CARBON	15K	5%	1/4W
R836	1-249-425-11	CARBON	4.7K	5%	1/4W
R841	1-249-429-11	CARBON	10K	5%	1/4W
⚠R842	1-217-641-00	FUSIBLE	4.7	5%	1/4W F
R843	1-249-429-11	CARBON	10K	5%	1/4W
R851	1-249-429-11	CARBON	10K	5%	1/4W
R853	1-249-429-11	CARBON	10K	5%	1/4W
R854	1-249-429-11	CARBON	10K	5%	1/4W
R861	1-249-417-11	CARBON	1K	5%	1/4W
R862	1-249-417-11	CARBON	1K	5%	1/4W
R863	1-249-423-11	CARBON	3.3K	5%	1/4W
R864	1-249-417-11	CARBON	1K	5%	1/4W
R871	1-249-429-11	CARBON	10K	5%	1/4W
R872	1-249-439-11	CARBON	68K	5%	1/4W
R873	1-249-441-11	CARBON	100K	5%	1/4W
R874	1-249-429-11	CARBON	10K	5%	1/4W
R875	1-249-429-11	CARBON	10K	5%	1/4W
R876	1-249-429-11	CARBON	10K	5%	1/4W
		< VIBRATOR >			
X301	1-760-489-11	VIBRATOR, CERAMIC (5MHz)			
X302	1-567-098-41	VIBRATOR, CRYSTAL (32.768MHz)			

****

The components identified by mark ⚠ or dotted line with mark ⚠ are critical for safety. Replace only with part number specified.	Les composants identifiés par une marque ⚠sont critiques pour la sécurité. Ne les remplacer que par une pièce portant le numéro spécifié.

MOTOR MOTOR (LID) SENSOR SWITCH (L) SWITCH (LID)

Ref. No.	Part No.	Description			Remark
*	1-653-412-11	MOTOR BOARD			
		**********			
		< CAPACITOR >			
C199	1-164-159-11	CERAMIC	0.1uF		50V
		< CONNECTOR >			
* CN191	1-568-944-11	PIN, CONNECTOR 6P			
CN192	1-770-011-41	CONNECTOR, BOARD TO BOARD 4P			
**********					
*	1-661-326-11	MOTOR (LID) BOARD			
		**********			
		< CAPACITOR >			
C723	1-165-319-11	CERAMIC CHIP	0.1uF		50V
		< CONNECTOR >			
* CN704	1-564-718-11	PIN, CONNECTOR (SMALL TYPE) 2P			
**********					
*	1-661-335-11	SENSOR BOARD			
		**********			
*	4-980-529-01	HOLDER (SENSOR)			
		< CONNECTOR >			
* CN706	1-564-705-11	PIN, CONNECTOR (SMALL TYPE) 3P			
		< DIODE >			
D901	8-719-029-95	DIODE TLN117			
		< TRANSISTOR >			
Q901	8-729-018-23	TRANSISTOR TPS626			
		< RESISTOR >			
R711	1-216-073-00	METAL CHIP	10K	5%	1/10W
R712	1-216-041-00	METAL CHIP	470	5%	1/10W
**********					
*	1-661-324-11	SWITCH (L) BOARD			
		**********			
		< CAPACITOR >			
C594	1-163-038-91	CERAMIC CHIP	0.1uF		25V
C595	1-163-038-91	CERAMIC CHIP	0.1uF		25V
		< CONNECTOR >			
* CN504	1-770-642-11	CONNECTOR, FFC/FPC 11P			

Ref. No.	Part No.	Description			Remark
		< DIODE >			
D521	8-719-048-97	DIODE SEL6910A-TP5 (ENTER YES)			
		< COIL >			
L701	1-216-296-91	CONDUCTOR, CHIP			
L702	1-216-296-91	CONDUCTOR, CHIP			
L703	1-216-296-91	CONDUCTOR, CHIP			
		< RESISTOR >			
R511	1-216-061-00	METAL CHIP	3.3K	5%	1/10W
R512	1-216-041-00	METAL CHIP	470	5%	1/10W
R513	1-216-045-00	METAL CHIP	680	5%	1/10W
R514	1-216-049-91	METAL GLAZE	1K	5%	1/10W
R515	1-216-053-00	METAL CHIP	1.5K	5%	1/10W
R516	1-216-057-00	METAL CHIP	2.2K	5%	1/10W
R517	1-216-065-00	METAL CHIP	4.7K	5%	1/10W
R518	1-216-075-00	METAL CHIP	12K	5%	1/10W
R523	1-216-053-00	METAL CHIP	1.5K	5%	1/10W
R524	1-216-057-00	METAL CHIP	2.2K	5%	1/10W
R525	1-216-065-00	METAL CHIP	4.7K	5%	1/10W
R584	1-216-029-00	METAL CHIP	150	5%	1/10W
R593	1-216-295-91	METAL GLAZE	0	5%	1/10W
R594	1-216-295-92	METAL GLAZE	0	5%	1/10W
		< SWITCH >			
S511	1-554-303-21	SWITCH, TACTILE (POWER)			
S512	1-554-303-21	SWITCH, TACTILE (ENTER YES)			
S513	1-554-303-21	SWITCH, TACTILE (EDIT NO)			
S514	1-554-303-21	SWITCH, TACTILE (TUNING PLAY MODE)			
S515	1-554-303-21	SWITCH, TACTILE (STEREO/MONO REPEAT)			
S516	1-554-303-21	SWITCH, TACTILE (BALANCE)			
S517	1-554-303-21	SWITCH, TACTILE (CHARACTER)			
S518	1-554-303-21	SWITCH, TACTILE (BASS/TREBLE)			
S523	1-554-303-21	SWITCH, TACTILE (CLOCK)			
S524	1-554-303-21	SWITCH, TACTILE (TIMER SELECT)			
S525	1-554-303-21	SWITCH, TACTILE (TIMER SET)			
**********					
*	1-661-327-11	SWITCH (LID) BOARD			
		**********			
		< CONNECTOR >			
* CN703	1-564-704-11	PIN, CONNECTOR (SMALL TYPE) 2P			
		< RESISTOR >			
R701	1-216-065-00	METAL CHIP	4.7K	5%	1/10W
R702	1-216-057-00	METAL CHIP	2.2K	5%	1/10W
R703	1-216-049-91	METAL GLAZE	1K	5%	1/10W
		< SWITCH >			
S701	1-762-010-11	SWITCH, LEVER (LID OPEN)			

Ref. No.	Part No.	Description			Remark
S702	1-762-010-11	SWITCH, LEVER (LID CLOSE)			
S703	1-762-010-11	SWITCH, LEVER (LID SHUT)			

****

*	1-661-323-11	SWITCH (R) BOARD			
		**********			
		< CAPACITOR >			
C570	1-163-025-11	CERAMIC CHIP	0.001uF		50V
C571	1-163-025-11	CERAMIC CHIP	0.001uF		50V
C572	1-165-319-11	CERAMIC CHIP	0.1uF		50V
C575	1-165-319-11	CERAMIC CHIP	0.1uF		50V
C576	1-165-319-11	CERAMIC CHIP	0.1uF		50V
C593	1-163-031-11	CERAMIC CHIP	0.01uF		50V
		< CONNECTOR >			
* CN501	1-568-862-11	SOCKET, CONNECTOR 19P			
CN502	1-774-758-11	CONNECTOR, FFC/FPC 11P			
		< DIODE >			
D506	8-719-048-97	LED SEL6910A-TP5 (+▶▶I)			
D509	8-719-048-97	LED SEL6910A-TP5 (I◀◀ –)			
D511	8-719-032-38	LED SEL6110R-TP5 (MD)			
D513	8-719-048-97	LED SEL6910A-TP5 (+▶▶I)			
D515	8-719-032-38	LED SEL6110R-TP5 (TUNER BAND)			
D516	8-719-048-97	LED SEL6910A-TP5 (REC PAUSE)			
D517	8-719-032-38	LED SEL6110R-TP5 (TAPE)			
D518	8-719-032-38	LED SEL6110R-TP5 (CD)			
D520	8-719-048-97	LED SEL6910A-TP5 (I◀◀ –)			
		< IC >			
IC502	8-759-636-56	IC M66311FP			
		< PHOTO INTERRUPTER >			
PH501	8-719-980-75	PHOTO INTRRUPTER GP2S24-C			
PH502	8-719-980-75	PHOTO INTRRUPTER GP2S24-C			
		< RESISTOR >			
R519	1-216-061-00	METAL CHIP	3.3K	5%	1/10W
R520	1-216-041-00	METAL CHIP	470	5%	1/10W
R521	1-216-045-00	METAL CHIP	680	5%	1/10W
R522	1-216-049-91	METAL GLAZE	1K	5%	1/10W
R527	1-216-061-00	METAL CHIP	3.3K	5%	1/10W
R528	1-216-041-00	METAL CHIP	470	5%	1/10W
R529	1-216-045-00	METAL CHIP	680	5%	1/10W
R530	1-216-049-91	METAL GLAZE	1K	5%	1/10W
R531	1-216-053-00	METAL CHIP	1.5K	5%	1/10W
R532	1-216-057-00	METAL CHIP	2.2K	5%	1/10W
R533	1-216-065-00	METAL CHIP	4.7K	5%	1/10W
R535	1-216-061-00	METAL CHIP	3.3K	5%	1/10W
R536	1-216-041-00	METAL CHIP	470	5%	1/10W
R537	1-216-045-00	METAL CHIP	680	5%	1/10W

Ref. No.	Part No.	Description			Remark
R538	1-216-049-91	METAL GLAZE	1K	5%	1/10W
R539	1-216-053-00	METAL CHIP	1.5K	5%	1/10W
R543	1-216-073-00	METAL CHIP	10K	5%	1/10W
R544	1-216-073-00	METAL CHIP	10K	5%	1/10W
R550	1-216-033-00	METAL CHIP	220	5%	1/10W
R558	1-216-033-00	METAL CHIP	220	5%	1/10W
R570	1-216-025-91	METAL GLAZE	100	5%	1/10W
R571	1-216-025-91	METAL GLAZE	100	5%	1/10W
R572	1-216-025-91	METAL GLAZE	100	5%	1/10W
R573	1-216-025-91	METAL GLAZE	100	5%	1/10W
R575	1-216-033-00	METAL CHIP	220	5%	1/10W
R578	1-216-033-00	METAL CHIP	220	5%	1/10W
R579	1-216-025-91	METAL GLAZE	100	5%	1/10W
R580	1-216-025-91	METAL GLAZE	100	5%	1/10W
R581	1-216-033-00	METAL CHIP	220	5%	1/10W
R583	1-216-033-00	METAL CHIP	220	5%	1/10W
R589	1-216-097-91	METAL GLAZE	100K	5%	1/10W
		< SWITCH >			
S519	1-554-303-21	SWITCH, TACTILE (■)			
S520	1-554-303-21	SWITCH, TACTILE (▶▶I)			
S521	1-554-303-21	SWITCH, TACTILE (I◀◀			
S522	1-554-303-21	SWITCH, TACTILE (▶II)			
S527	1-554-303-21	SWITCH, TACTILE (VOL –)			
S528	1-554-303-21	SWITCH, TACTILE (VOL +)			
S529	1-554-303-21	SWITCH, TACTILE (MD)			
S530	1-554-303-21	SWITCH, TACTILE (CD)			
S531	1-554-303-21	SWITCH, TACTILE (TAPE)			
S532	1-554-303-21	SWITCH, TACTILE (TUNER BAND)			
S533	1-554-303-21	SWITCH, TACTILE (REC STOP)			
S535	1-554-303-21	SWITCH, TACTILE (REC PAUSE)			
S536	1-554-303-21	SWITCH, TACTILE (CD SYNCHRO)			
S537	1-554-303-21	SWITCH, TACTILE (REC)			
S538	1-554-303-21	SWITCH, TACTILE (SCROLL)			
S539	1-554-303-21	SWITCH, TACTILE (DISPLAY)			

****

*	1-661-328-11	TERMINAL BOARD			
		**********			
		< CAPACITOR >			
C611	1-162-282-31	CERAMIC	100PF	10%	50V
C612	1-124-907-11	ELECT	10uF	20%	50V
C613	1-162-282-31	CERAMIC	100PF	10%	50V
C641	1-136-165-00	FILM	0.1uF	5%	50V
C661	1-162-282-31	CERAMIC	100PF	10%	50V
C662	1-124-907-11	ELECT	10uF	20%	50V
C663	1-162-282-31	CERAMIC	100PF	10%	50V
C9001	1-162-600-11	CERAMIC	0.0047uF	5%	50V
C9002	1-162-600-11	CERAMIC	0.0047uF	5%	50V

TERMINAL TRANSFORMER TUNER

Ref. No.	Part No.	Description			Remark
		< CONNECTOR >			
CN601	1-770-722-11	CONNECTOR, BOARD TO BOARD 6P			
* CN602	1-568-832-11	SOCKET, CONNECTOR 13P			
		< DIODE >			
D631	8-719-987-63	DIODE 1N4148M			
D641	8-719-987-63	DIODE 1N4148M			
D642	8-719-987-63	DIODE 1N4148M			
		< JACK >			
J601	1-770-720-11	JACK, PIN 4P (LINE IN/OUT)			
		< TRANSISTOR >			
Q631	8-729-620-05	TRANSISTOR 2SC2603-EF			
		< RESISTOR >			
R612	1-249-441-11	CARBON	100K	5%	1/4W
R621	1-249-417-11	CARBON	1K	5%	1/4W
R622	1-249-417-11	CARBON	1K	5%	1/4W
R632	1-249-429-11	CARBON	10K	5%	1/4W
R641	1-249-441-11	CARBON	100K	5%	1/4W
R642	1-249-441-11	CARBON	100K	5%	1/4W
R643	1-249-441-11	CARBON	100K	5%	1/4W
R662	1-249-441-11	CARBON	100K	5%	1/4W
R671	1-249-417-11	CARBON	1K	5%	1/4W
R672	1-249-417-11	CARBON	1K	5%	1/4W
		< RELAY >			
RY601	1-515-921-11	RELAY (12V)			
		< TERMINAL >			
TB601	1-694-091-11	TERMINAL BOARD (SPEAKER)			

****

*	1-661-332-11	TRANSFORMER BOARD			
		**********			
		< CONNECTOR >			
* CN803	1-580-445-11	PIN, CONNECTOR 3P			
* CN804	1-564-512-11	PLUG, CONNECTOR 9P			
		< RESISTOR >			
⚠R830	1-202-725-00	SOLID	3.3M	10%	1/2W (US,CND)
		< TRANSFORMER >			
⚠T801	1-429-663-11	TRANSFORMER POWER (US,CND)			
⚠T801	1-429-661-11	TRANSFORMER POWER (AEP,UK,G,IT)			
⚠T801	1-429-662-11	TRANSFORMER POWER (SP,HK)			

****

Ref. No.	Part No.	Description			Remark
*	1-661-333-11	TUNER BOARD			
		**********			
		< CAPACITOR >			
C1	1-136-177-00	FILM	1uF	5%	50V
C16	1-162-306-11	CERAMIC	0.01uF	30%	16V
C17	1-124-907-11	ELECT	10uF	20%	50V
C18	1-162-306-11	CERAMIC	0.01uF	30%	16V
C19	1-124-261-00	ELECT	10uF	20%	50V
		< CONNECTOR >			
* CN4	1-568-834-11	SOCKET, CONNECTOR 15P			
		< DIODE >			
D9001	8-719-987-63	DIODE 1N4148M			
D9002	8-719-987-63	DIODE 1N4148M			
		< RESISTOR >			
R8	1-249-429-11	CARBON	10K	5%	1/4W
R9	1-249-421-11	CARBON	2.2K	5%	1/4W
		< TERMINAL >			
TB1	1-233-592-11	TUNER (US,CND,SP,HK)			
TB1	1-693-287-11	TUNER (AEP,UK,G,IT)			
		< TERMINAL >			
TM1	1-537-238-21	TERMINAL BOARD (ANTENNA)(US,CND,SP,HK)			
TM1	1-537-488-11	TERMINAL BOARD (ANTENNA)(AEP,UK,G,IT)			

****

		MISCELLANEOUS
		**********
15	1-777-137-11	WIRE (FLAT TYPE) (11CORE)
58	1-777-033-11	WIRE (FLAT TYPE) (19 CORE)
59	1-773-004-11	WIRE (FLAT TYPE) (15 CORE)
61	1-777-291-11	WIRE (FLAT TYPE) (21 CORE)
62	1-769-974-11	WIRE (FLAT TYPE) (13 CORE)
63	1-773-106-11	WIRE (FLAT TYPE) (19 CORE)
64	1-773-117-11	WIRE (FLAT TYPE) (19 CORE)
68	1-533-293-11	FUSE HOLDER
117	1-777-291-11	WIRE (FLAT TYPE) (21 CORE)
124	1-769-118-11	WIRE (FLAT TYPE) (30 CORE)
⚠125	1-770-019-11	ADAPTOR, CONVERSION PLUG 3P(HK)
136	1-769-119-11	WIRE (FLAT TYPE) (18 CORE)
⚠207	8-583-009-11	OPTICAL PICK-UP KMS-210A/J-N (MD)
270	1-777-033-11	WIRE (FLAT TYPE) (19 CORE)
⚠305	8-848-367-11	OPTICAL PICK-UP KSS-213B/K-N (CD)
306	1-769-069-11	WIRE (FLAT TYPE) (16 CORE)
⚠CNP801	1-575-651-31	CORD, POWER (AEP,G,IT,SP,HK)
⚠CNP801	1-696-570-21	CORD, POWER (UK)
⚠CNP801	1-775-789-11	CORD, POWER (US,CND)
⚠F801	1-533-296-11	FUSE,GLASS CYLINDRICAL (2A 125V)(US,CND)
⚠F801	1-532-259-00	FUSE, TIME LAG (T1.6AL 250V)(SP,HK)

The components identified by mark ⚠ or dotted line with mark ⚠ are critical for safety. Replace only with part number specified.	Les composants identifiés par une marque ⚠sont critiques pour la sécurité. Ne les remplacer que par une pièce portant le numéro spécifié.

Ref. No.	Part No.	Description	Remark
⚠F802	1-532-215-00	FUSE, TIME LAG (T0.8AL 250V)	(AEP,UK,G,IT,SP,HK)
FAN801	1-698-651-11	FAN, D.C.	
HR901	1-500-304-21	HEAD, OVER LIGHT (RF322-74A)	
M101	A-4660-651-A	MOTOR (SLED) ASSY	
M102	A-4660-650-A	CHASSIS ASSY, BU	
M103	X-4917-504-1	MOTOR, ASSY(CD)(SLED MOTOR)	
M104	X-4917-523-4	MOTOR, ASSY(CD)(SPINDLE MOTOR)	
M701	X-4947-281-1	LID MOTOR,ASSY	
M191	A-4660-646-A	MOTOR (LOADING) ASSY	
M903	A-4608-362-A	MOTOR (L)ASSY	
S102	1-762-148-11	SWITCH, PUSH (2 KEY)	(PROTECT/REFLECT SEITCH)
S801	1-572-675-11	SWITCH, POWER VOLTAGE CHANGE	(VOLTAGE SELECTOR)(SP,HK)
S291	1-571-924-11	SWITCH, LEAF (LOAD OUT)	
S292	1-571-924-11	SWITCH, LEAF (LOAD IN)	
⚠T801	1-429-663-11	TRANSFORMER POWER (US,CND)	
⚠T801	1-429-661-11	TRANSFORMER POWER (AEP,UK,G,IT)	
⚠T801	1-429-662-11	TRANSFORMER POWER (SP,HK)	

****

ACCESSORIES & PACKING MATERIALS
****

*	4-941-548-01	LABEL, CLASS (1)(EXCEPT US,CND)
*	4-981-825-01	CUSHION (RIGHT)
*	4-981-826-01	CUSHION (LEFT)

****

****
HARDWARE LIST
****

#1	7-685-647-79	SCREW +BVTP 3X10 TYPE2 N-S
#2	7-685-873-09	SCREW +BVTT 3X10 (S)
#3	7-685-871-01	SCREW +BVTT 3X6 (S)
#4	7-685-646-79	SCREW +BVTP 3X8 TYPE2 N-S
#5	7-685-649-79	SCREW +BVTP 3X14 TYPE2 N-S
#6	7-685-132-19	SCREW +BTP 2.6X5 TYPE2 N-S
#7	7-685-645-79	SCREW +BVTP 3X6 TYPE2 N-S
#8	7-621-773-86	SCREW +BVTT 2.6X4 (S)
#9	7-621-775-20	SCREW +B 2.6X5
#10	7-685-104-19	SCREW +P 2X6 TYPE2 NON-SLIT
#11	7-627-852-08	SCREW,PRECISION +P 1.7X2.5
#12	7-685-105-19	TPG +P 2X8, TYPE 2, NON-SLIT
#13	7-621-775-10	SCREW +B 2.6X4
#14	7-685-234-19	SCREW +KTP 2.6X8 TYPE2NON-SLIT
#15	7-624-105-04	STOP RING 2.3, TYPE -E
#16	7-621-255-15	SCREW +P 2X3
#17	7-685-546-19	SCREW +BTP 3X8 TYPE2 N-S
#18	7-685-874-09	SCREW +BVTT 3X12 (S)
#19	7-623-422-07	LW3, TYPE B

The components identified by mark ⚠ or dotted line with mark ⚠ are critical for safety. Replace only with part number specified.	Les composants identifiés par une marque ⚠sont critiques pour la sécurité. Ne les remplacer que par une pièce portant le numéro spécifié.